westcoat®

SHUR DECK

(over plywood)

WP

WATERPROOF

RELIABLE MOISTURE BARRIERS

4007 Lockridge St, San Diego, CA 92102 | 800-250-4519 | westcoat.com

westcoat®

SHUR DECK SUBMITTAL PACKAGE

DIVISION 7 – THERMAL AND MOISTURE PROTECTION
SECTION 07 18 13 PEDESTRIAN TRAFFIC COATINGS
PLYWOOD SURFACES

TABLE OF CONTENTS

System Brochure	3-5
System Specification Sheet	6-11
CSI Specification	12-17
Evaluation Report	18-26
Color Chart	27-29
Sample Warranty	30-31
General Maintenance	32-33
Architectural Details	34-48

4007 Lockridge St, San Diego, CA 92102 | 800-250-4519 | westcoat.com

westcoat®

SYSTEM BROCHURE

4007 Lockridge St, San Diego, CA 92102 | 800-250-4519 | westcoat.com

westcoat

Shur Deck™

ABOUT SHUR-DECK™

Designed for plywood and concrete decks, Shur Deck is a reinforced, cementitious waterproofing system built for long-term performance in commercial and multifamily environments. This high-strength assembly combines a metal or glass lath reinforcement with a one-cement, dry-polymer formula—no liquid emulsion required—for a tough, resilient surface that stands up to the elements.

With its seamless, skid-resistant, and crack-resistant finish, Shur Deck delivers both protection and beauty for balconies, walkways, and rooftop decks. For projects requiring additional strength and performance, upgrade to Shur Deck™ Pro, which features an enhanced intermediate layer for maximum durability and longevity.

REBUFFS RAIN, SNOW + SPILLS.

- Seamless waterproofing
- Crack-resistant
- Flexible finishes
- Long-term durability
- Dry polymer cement
- Optional glass lath
- Fire-rated system
- Code-compliant

FOR PROFESSIONAL USE ONLY.

westcoat.com / 800.250.4519 / info@westcoat.com

IAPMO ER-587 • Class A and One Hour Fire Rated • City of LA Approval
Meets Wildland Urban Interface (W.U.I) Requirements

SHUR DECK SYSTEM OVERVIEW

Shur Deck is a reinforced, cementitious waterproofing system designed for plywood and concrete substrates. Combining a metal or optional glass lath with a one-cement, dry-polymer formulation, the system eliminates the need for liquid emulsion while providing a seamless, flexible, and crack-resistant surface. Engineered for long-term durability, Shur Deck protects against water intrusion and wear while maintaining a smooth, skid-resistant finish ideal for commercial decks, balconies, and walkways.

SHUR DECK PRO SYSTEM OVERVIEW

Shur Deck Pro takes performance a step further with the addition of a waterproofing membrane and fabric reinforcement layer. This advanced configuration delivers superior moisture protection and structural resilience, creating a fortified barrier for high-traffic or exposed applications. Retaining the same one-cement, dry-polymer technology as the standard system, Shur Deck Pro provides a seamless, durable, and flexible surface engineered for environments that demand maximum waterproofing and durability.

SHUR DECK OVER CONCRETE SYSTEM OVERVIEW

Protect and enhance your concrete surfaces with Shur Deck Over Concrete. This multi-layer, cementitious waterproofing system is built for long-term performance in demanding environments and is designed for use over concrete substrates. Installed at a minimum 3/16" thickness, this trowel-applied system incorporates a reinforced waterproofing membrane, fiberlath reinforcement, and a durable acrylic topcoat to create a seamless, slip-resistant barrier against moisture intrusion. Ideal for exterior concrete surfaces such as balconies, walkways, rooftop decks, and other pedestrian areas.

Engineered for durability and designed to perform, Shur Deck resists cracking, UV degradation, and weathering — maintaining its integrity and appearance through years of exposure. The system's flexible waterproofing membrane and acrylic topcoat provide excellent protection against moisture intrusion while delivering a clean, uniform finish that's easy to maintain.

Additional Shur Deck Over Concrete Features

Class A Fire Rating • UV & Weather resistance • Solvent-free formula
Slip-resistant surface • Commercial & Multi-family use

westcoat

HAVE A QUESTION? GET IN TOUCH:
westcoat.com / 800.250.4519 / info@westcoat.com

4007 Lockridge Street, San Diego, CA 92102, USA.

westcoat®

SYSTEM SPECIFICATION SHEET

4007 Lockridge St, San Diego, CA 92102 | 800-250-4519 | westcoat.com

westcoat

SYSTEM SPECIFICATION

WP WATERPROOF RELIABLE MOISTURE BARRIERS

Shur Deck over Plywood

Description

Shur Deck is a multi-layer, cementitious roof and walking deck system designed for use over plywood or concrete substrates. This system consists of reinforcing metal lath, a series of cementitious layers and acrylic sealer. Installed at a minimum ¼ inch finished thickness, this seamless, trowel applied system provides longterm durability and waterproofing protection over plywood substrates. The Shur Deck System is finished with a high-solids, pigmented acrylic sealer which provides long-term protection of the system from UV degradation, offering aesthetic appeal and enhanced design flexibility.

Uses

The Shur Deck System is designed for exterior walking roof decks, observation decks, promenade decks and balconies, all pedestrian traffic areas and walkways and breezeways.

System Overview

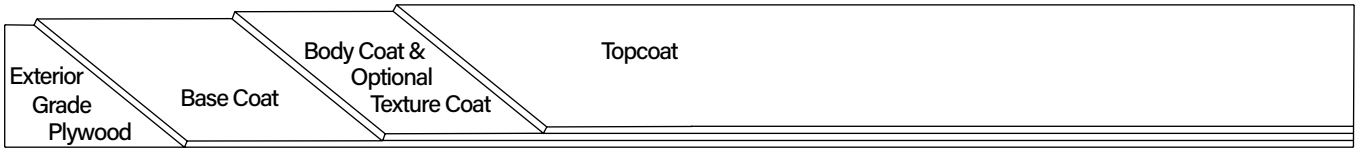

System Data

	Base Coat	Body Coat (2 coats)	Texture Coat (optional)	Top Coat (2 coats)
Coverages	30-45 ft² per mix	1st coat: 80-90 ft² per mix 2nd coat: 80-90 ft² per mix	100-150 ft per mix	1st coat: 300-350 ft² per gal 2nd coat: 300-350 ft² per gal

Components		**Shelf Life**
	WP-53 Hybrid Sealant	1 year
	WP-25 Metal Lath	Indefinite
	or	
	WP-30 Westcoat Glass Lath	5 years
	WP-40 Sheet Membrane	1 year
	WP-10 Staples	Indefinite
	TC-11 Dry Polymer Basecoat Cement	1 year
	SC-10 Acrylic Topcoat	2 years

ER-517 IAPMO ES

Certifications

IAPMO Evaluation Report ER-517
Class A Fire-Retardant Roofing System
One-Hour Fire Resistance Rating
Meets 2023 City of Los Angeles Building and Residential Code (LABC &LARC)
Meets Wildland Urban Interface (W.U.I) Requirements
Meets the Requirements of Decking SFM 12-7A-4 Parts A & B

DISCLAIMER: PURCHASER'S SOLE AND EXCLUSIVE REMEDY AGAINST THE MANUFACTURER OF WESTCOAT, SHALL BE LIMITED SOLELY TO THE REPLACEMENT OF ANY DEFECTIVE MATERIAL OR A PAYMENT BY THE MANUFACTURER IN AN AMOUNT EQUAL TO THE COST OF THE ORIGINAL MATERIAL.

Shur Deck over Plywood

Advantages
Seamless, Monolithic Membrane ▪ Excellent Adhesion to Plywood Substrates ▪ Will not Soften Under High Temperatures ▪ Resists Degradation from UV, Ozone and Weathering ▪ Outstanding Long-Term Durability and Performance ▪ Solvent-free ▪ One-Hour Fire Resistance Rating ▪ Class A Fire-Retardant System

Inspection
For installation of the Shur Deck system, plywood must be a minimum of ⅝ inch (¾ inch preferred) CDX or exterior grade. For applications over pressure-treated lumber, please contact your Westcoat Representative prior to application. Slope must be a minimum of ¼ inch per linear foot to allow for proper drainage. Decks should meet local building codes. The deck shall be tongue and groove, completely blocked and nailed (glued and screwed is best). Plywood shall have a maximum joist span of 16 inches. Deflection should be less than L/360. OSB is not a suitable substrate for this material. Moisture vapor commonly collects in areas below a vapor barrier, such as the waterproofing membrane of the deck covering system. Venting must be added to help relieve moisture vapor transmission. Please refer to all local building codes regarding venting requirements.

Preparation
Be sure the surface is clean, dry and free of grease, paint, oil, dust or any foreign material that may prevent proper adhesion. “Dry” plywood is typically defined as having less than a 10% moisture reading or by showing no moisture with a plastic sheeting test. Applicator is responsible for ensuring that the substrate is acceptable for application. Do not apply to wet plywood.

Flashing
Install a minimum 26 gauge, bonderized, 4″x 6″ wall-to-deck flashing where the deck meets the wall. Place the 6-inch side up the vertical wall and minimum 4″x 2″ fascia flashing on deck edge with the 4″ side placed on the deck. Nail in a staggered pattern every 4 to 6 inches. Be sure to caulk all flashings seams and overlaps using WP-53 Hybrid Sealant. (Note: If the flashing is not bonderized, it must be prepared in accordance with SSPC-SP11 surface preparation standards, in order for the coating to adhere properly).

Sheet Membrane
Westcoat requires the installation of 6 inch WP-40 Sheet Membrane to all plywood seams for reinforcement. For maximum protection, WP-40 36 inch, can be applied to the entire deck. WP-40 may also be installed behind or on top of the flashing as a backup waterproofing measure. For increased adhesion, WP-43 Sheet Membrane Primer may be used prior to applying the Sheet Membrane. WP-40 may not be left exposed to the sun for more than 7 days. See WP-40 Sheet Membrane and WP-43 Sheet Membrane Primer Product Specification Sheets for additional information.

DISCLAIMER: PURCHASER’S SOLE AND EXCLUSIVE REMEDY AGAINST THE MANUFACTURER OF WESTCOAT, SHALL BE LIMITED SOLELY TO THE REPLACEMENT OF ANY DEFECTIVE MATERIAL OR A PAYMENT BY THE MANUFACTURER IN AN AMOUNT EQUAL TO THE COST OF THE ORIGINAL MATERIAL.

Metal or Glass Lath

The Shur Deck System can be installed with either the WP-25 Metal Lath or WP-30 Westcoat Glass Lath. For maximum protection against corrosion, WP-30 Westcoat Glass Lath should be used in lieu of WP-25. Place the desired lath on the plywood and cut it to fit the area ensuring the edge of the lath is offset two inches from any parallel plywood seams. The lath should run across the grain of the plywood (across the long seams) when possible. The grain of the metal lath should be placed so that it curves down at the edge of the deck. When using the glass lath, unroll lath and place curl side down. Lath should be held back ½ inch from all deck edges, leaving ½ inch of flashing exposed. With the lath in place, start in the center working your way out. Staple the lath with WP-10 Staples, using a minimum of 22 staples per square foot. Overlap the lath 1-2 inches and staple every 1-2 inches along the seam. With a hammer, lightly pound down any seams or staples that are higher than the lath. When using the WP-30, ensure that the lath is secured properly to the plywood. This is especially true at all overlaps and edges. See WP-30 Westcoat Glass Lath Product Specification Sheet for additional information.

Base Coat

Pour 1 gallon of potable water into a clean mixing bucket and then add one bag of TC-11 Dry Polymer Basecoat Cement. Mix until uniform with a mechanical mixer at a low rpm. Pour the mixture onto the metal lath and with trowel on edge, smooth the mixture to the top of the lath at the rate of 40-45 square feet per batch. Please note, if using WP-30 Westcoat Glass Lath, coverage of the Base Coat will be 30 square feet per batch. Trowel and brush the base coat up to the metal lath edge, leaving 2 inches of flashing exposed. For best results, tape off the flashing. Use a paintbrush to spread the base coat into all edges. Tap the deck lightly with a hammer to help in smoothing out trowel ridges. As soon as it is dry, usually 1 to 2 hours at 70 °F/ 50% RH, scrape off any high spots or ridges, before applying the Body Coat. Lower temperatures and higher humidity will require longer dry times.

Flash Wrap (Optional)

For additional waterproofing and protection along the perimeter of the deck, Flashing Fabric can be applied over the base coat. Install WP-45 Flashing Fabric to all vertical flashings. Apply a coat of WP-95 Waterproofing Membrane onto the vertical surface of and onto the adjacent horizontal surface by using a brush or roller at a rate of 100-150 square feet per gallon. Immediately embed the WP-45 Flashing Fabric, fuzzy side down, into the wet WP-95, overlapping successive runs of fabric edges and ends, a minimum of 2 inches. Apply a coat of WP-95 at a coverage rate of 50 square feet per gallon over the WP-45. Make sure the fabric is fitted tightly in corners and around protrusions. Apply additional WP-95 as necessary over the fabric areas to ensure positive waterproofing is completely covering the fabric. The waterproofing membrane should be a minimum of 20 mils DFT. Allow the Flash Wrap to dry for 4-6 hours before proceeding with the Body Coat.

DISCLAIMER: PURCHASER'S SOLE AND EXCLUSIVE REMEDY AGAINST THE MANUFACTURER OF WESTCOAT, SHALL BE LIMITED SOLELY TO THE REPLACEMENT OF ANY DEFECTIVE MATERIAL OR A PAYMENT BY THE MANUFACTURER IN AN AMOUNT EQUAL TO THE COST OF THE ORIGINAL MATERIAL.

Body Coat
The Body Coat is applied in two coats. Mix 1 gallon of water to one 50 lb. bag of TC-11 Dry Polymer Basecoat Cement. Blend with a mechanical mixer for 2-3 minutes, until an even consistency is achieved. Trowel the material over the dry membrane surface at a rate of 80-90 square feet per mix. Brush the mixed material onto the flashing and all vertical surfaces where bonding will occur and trowel apply to the entire deck surface as smooth as possible. Allow the first coat to dry for a minimum of 2 hours before applying the second coat. Repeat the process for the 2nd coat as mentioned above. An optional texture coat may be applied on top of the second application of the Body Coat. The Body Coat must be allowed to dry for a minimum of 2 hours at 70°F/50% RH or until dry to the touch before moving to the next step. Remove minor surface imperfections by lightly scraping or sanding. Be sure to remove all debris prior to commencing with the next step.

Texture Coat (Optional)
An optional Texture Coat is prepared by mixing 1 gallon of water with each bag of TC-11 Dry Polymer Basecoat Cement. The Texture Coat is applied to the surface at a rate of 100-150 square feet per bag. Allow the Texture Coat to dry a minimum 2 hours at 70F degrees, 50 percent relative humidity and then sand the surface to produce the desired level of finish. Ensure all dust and debris has been removed. For a smoother Texture Coat, TC-12 Shur Deck Fine Cement may be used in lieu of TC-11. Please refer to the TC-12 Product Specification Sheet for additional information.

Topcoat
Do not apply if rain is forecast within 48 hours or heavy dew within 24 hours. If multiple batches of SC-10 are present, box all materials prior to use, to ensure color consistency. Use a mechanical mixer at a slow speed and mix material until a homogeneous mixture and color is obtained. The material may be thinned by adding up to a maximum of one quart of water per gallon, for the first coat. For best results, it is not recommended to thin the final coat. Roll two thin applications of SC-10 using a ¾ inch roller at a rate of 300-350 square feet per gallon. Roll the material in two directions to achieve a uniform finish. Coverage will vary according to texture. For best results, allow SC-10 4-6 hours drying time at 70F degrees before permitting light pedestrian traffic or additional coats are applied. Allow 24 hours to cure before heavy traffic is permitted. Allow 48 hours before heavy objects are placed on the surface and allow 72 hours for vehicular traffic. Allow 5 days prior to any abrasion or chemical exposure.

Optional Materials
Skid Resistance
- CA-29 Mini Safe Grip, CA-30 Small Safe Grip or CA-31 Large Safe Grip can be added to the SC-10 Acrylic Topcoat for added skid resistance.

Deck Drain
- If a drain is required, Westcoat's WP-35 ALX™ Deck Drain may be installed between the Sheet Membrane and Metal Lath steps in the application instructions. Please read the WP-35 ALX™ Deck Drain Product Specification Sheet for detailed instructions.

* Please refer to Product and System Specification Sheets for additional information.

Clean Up
Uncured material can be removed with soap and warm water. If cured, material can be removed mechanically or with an environmentally-safe solvent.

DISCLAIMER: PURCHASER'S SOLE AND EXCLUSIVE REMEDY AGAINST THE MANUFACTURER OF WESTCOAT, SHALL BE LIMITED SOLELY TO THE REPLACEMENT OF ANY DEFECTIVE MATERIAL OR A PAYMENT BY THE MANUFACTURER IN AN AMOUNT EQUAL TO THE COST OF THE ORIGINAL MATERIAL.

Maintenance
Exterior surfaces can be swept daily with water and a broom. For tougher dirt or grease, use degreaser diluted with water 20:1 and a soft bristle brush or broom. Be sure to rinse well. To remove calcium or lime build up, brush diluted 100 grain vinegar onto the surface; be sure to rinse any residue. The Merko System should be inspected for wear every 2 to 4 years. The system should be resealed with the appropriate Westcoat sealer every 3 to 5 years depending upon traffic and UV exposure. Contact the original installer of Westcoat for complete re-coating instructions.

Health Precautions
Inhalation of vapor or mist can cause headache, nausea, irritation of nose, throat and lungs. Prolonged or repeated skin contact can cause slight skin irritation. Cements contain silicas; dust mask or respirator should be used when mixing, sanding or grinding.

Solvent based products are extremely flammable, extinguish all pilot lights and sources of ignition such as electrical motors. Be sure to have adequate cross ventilation prior to installing.

Limitations
- This system is designed for professional use only.
- Read Product Specification Sheets for every product you will be using before beginning the project.
- Do not apply at temperatures below 50°F or above 90°F.
- Westcoat waterproof deck systems are designed for professional installation.
- System warranties require installation by currently listed applicators.
- In freezing climates, sufficient pitch is required to ensure run-off.
- When installing a deck system over an unheated enclosed space (e.g., garage, etc.) provisions must be made to vent the area.
- Drains must be of a design suitable to receive Shur Deck system.
- Shur Deck System provides moderate chemical resistance. Avoid exposure to harsh chemicals or acids.
- Heavy objects can affect the decking system and result in hairline cracks at the surface of the system. Avoid placing heavy objects on or dragging them across the Shur Deck surface.
- Cementitious materials should be used within 30 minutes, do not re-temper.
- The Waterproofing Membrane should not be exposed for more than 72 hours prior to being covered with the Body Coat.
- Do not leave any layer unprotected for more than 30 days prior to completing the full system installation, including the final topcoat application.
- Not designed for vehicular or heavy steel wheeled traffic.
- Protect all finished surfaces that are not intended to receive the deck coating system materials.
- Rain will wash away uncured Westcoat acrylic products.
- If inclement weather threatens, cover deck to protect new application.
- Sealers will make the surface slippery. Please be aware of the texture of the surface and how the sealer will affect the look, feel and skid resistance.
- Approval and verification of proposed colors, textures and slip resistance is recommended.
- Do not allow Westcoat products to freeze.
- Moisture vapor commonly collects in areas below a vapor barrier, such as the waterproofing membrane of the deck covering system. Vent must be added to help relieve moisture vapor transmission. Please refer to all local building codes regarding venting requirements.

DISCLAIMER: PURCHASER'S SOLE AND EXCLUSIVE REMEDY AGAINST THE MANUFACTURER OF WESTCOAT, SHALL BE LIMITED SOLELY TO THE REPLACEMENT OF ANY DEFECTIVE MATERIAL OR A PAYMENT BY THE MANUFACTURER IN AN AMOUNT EQUAL TO THE COST OF THE ORIGINAL MATERIAL.

Slip Precaution

Westcoat Specialty Coatings Systems highly recommends the use of a slip-resistant additive to all coatings/systems that may be exposed to wet, oily, greasy or slippery conditions. It is the end user's responsibility to provide a flooring system that meets current safety standards. Westcoat and its distributors will not be responsible for injury incurred during a slip and fall incident. For the current coefficient of friction requirements, please consult your local building codes.

Test Data

Test	Results
Abrasion Resistance ASTM 1242A, AC-39 Wheel, 1,000 mg load for 1,000 cycles)	0.001 inch loss
Adhesion (ASTM C794)	>374 psi
Compressive Strength (ASTM C109)	3,500 psi
Elongation (ASTM D638)	0.04 ft./ft.
Fire Rating One-Hour	ASTM E-119
Fire Rating Class A Fire-Retardant Rated	ASTM E-108
Ozone Resistance - 30 day exposure	No visual adverse effects
Resistance to Aging (ASTM G23, AC 39)	2,000 hours No visual signs of failure
Tensile Strength (ASTM C190)	>450 psi
Thickness	¼ inch
Water Absorption(ASTM D-570, AC 39/S4.8)	Average 9.0%
Weight	<2 lbs/ft^2
Wind Resistance	80 mph
Freeze/Thaw Cycling (ASTM C67)	No breakage or weight loss

DISCLAIMER: PURCHASER'S SOLE AND EXCLUSIVE REMEDY AGAINST THE MANUFACTURER OF WESTCOAT, SHALL BE LIMITED SOLELY TO THE REPLACEMENT OF ANY DEFECTIVE MATERIAL OR A PAYMENT BY THE MANUFACTURER IN AN AMOUNT EQUAL TO THE COST OF THE ORIGINAL MATERIAL.

4007 Lockridge St ▪ San Diego, CA 92102
800-250-4519 ▪ Fax 619-255-7187 ▪ westcoat.com

westcoat®

CSI SPECIFICATION

4007 Lockridge St, San Diego, CA 92102 | 800-250-4519 | westcoat.com

DIVISION 7 – THERMAL AND MOISTURE PROTECTION
SECTION 07 18 13 PEDESTRIAN TRAFFIC COATINGS
PLYWOOD SURFACE(S)

PART 1 GENERAL

1.01 SUMMARY

A. Section includes: Provide a complete acrylic modified cementitious waterproof system for plywood surfaces that meet the requirements for specific use indicated in the contract documents. Include all applicable substrate testing, surface preparation, and detail work.

1.02 RELATED SECTIONS

A. Specified elsewhere:
1. Section 07 24 00 Exterior Insulation and Finish Systems
2. Section 09 97 26 Cementitious Coatings
3. Section 07 01 10.81 Waterproofing Replacement
4. Section 07 10 00 Damproofing and Waterproofing
5. Section 07 14 00 Fluid Applied Waterproofing
6. Section 07 14 16 Cold Fluid Applied Waterproofing
7. Section 07 16 13 Polymer Modified Cement Waterproofing
8. Section 09 09 00 Finishes
9. Section 09 94 00 Decorative Finishing

1.03 REFERENCES

A. IAPMO – ER-517
B. California Building Code (2022 CBC) & Residential Code (2022 CRC)
C. City of Los Angeles Building Code (2023 LABC) & Residential Code (2023 LARC)
D. Class I Vapor Retarder (ASTM E96)

1.04 SUBMITTALS

A. Submit under provisions of Section 013300.
B. Product Data: Submit manufacturer's product data sheets on each product and system to be used including:
1. Preparation instructions and recommendations.
2. Storage and handling requirements.
3. Installation methods.
4. Maintenance requirements.
C. Selection Samples: For each system specified, provide two sets of samples and color charts representing manufacturer's full range of colors and patterns.

1.05 QUALITY ASSURANCE

A. Cited Standards for reference:

1. Water Vapor Transmission (ASTM E 96)
2. Bond Strength (ASTM C297)
3. Accelerated Aging (ASTM D756)
4. Abrasion Resistance (ASTM D1242)
5. Water Absorption (ASTM D570)
6. Impact Resistance (ASTM D3746)

7. Freeze-Thaw (ASTM C67)
8. Surface Burning (ASTM E84)
9. Chemical Resistance (ASTM D2299)
10. Fire Tests of Roof Coverings (ASTM E108)
11. One-Hour Fire Test (ASTM E119)
12. Static Coefficient of Friction (ASTM C1028-96)
13. Compressive Strength (ASTM C109)
14. Tensile Strength (ASTM C190)
15. Chemical Resistance (ASTM D2299)
16. Fire-Test-Response of Deck Structures to Burning Brand (ASTM 2726-12a)
17. Under-Deck Fire Test Response of Deck Materials (ASTM E2632)

B. All materials used in the pedestrian traffic system shall be manufactured and provided by a single manufacturer to ensure compatibility and proper bonding.
C. Use adequate numbers of skilled workmen thoroughly trained and experienced in the necessary crafts and completely familiar with the specified requirements and methods needed for proper performance of the work of this section.
D. Contractor shall have a minimum of 3 years experience installing pedestrian traffic coatings of this type which is required for this project and who is acceptable to the manufacturer.
   1. Applicator shall designate a single individual as project foreman who shall be on site at all times during installation.
   2. Contractor must show and have QCA Qualified Contractor/Applicator paperwork from the manufacturer of the coating system, as required to obtain a long-term jobsite specific warranty.
E. Convene a pre-application meeting before the start of application of coating system. Require attendance of parties directly affecting work of this section, including: Architect, contractor, applicator, and authorized representative of the coating system manufacturer and interfacing trades. Review the following:
   1. Drawings and specifications affecting work of this section.
   2. Protection of adjacent surfaces.
   3. Surface preparation and substrate conditions.
   4. Application.
   5. Field quality control.
   6. Protection of coating system.
   7. Repair of coating system.
   8. Coordination with other work.

1.06 DELIVERY, STORAGE & HANDLING

A. Delivery: Materials shall be delivered to the job site in sealed, undamaged containers. Each container shall be clearly marked with manufacturer's label showing type of material, color, and lot number.
B. Storage: Store all materials in a clean, dry place with a temperature range in accordance with manufacturer's instructions.
C. Handling: Handle products carefully to avoid damage to the containers. Read all labels and Material Safety Data Sheets prior to use.

1.07 PROJECT SITE CONDITIONS

A. Maintain environmental conditions (temperature and weather) within the limits recommended by the manufacturer.
B. Schedule coating work to avoid rain and excessive dust and airborne contaminates. Protect work areas from moisture and excessive airborne contaminates during coating application.
C. Before any work is started, the applicator shall examine all surfaces for any deficiencies. Should any deficiencies exist, the architect, owner or general contractor shall be notified in writing and any corrections necessary shall be made.

1.08 WARRANTY

A. Upon completion of the work in this section provide a written warranty from the manufacturer against defect of materials for a period of 5 (five) years. To obtain project specific warranty the coating system applicator must be a Westcoat Qualified Contractor/ Applicator and apply for warranty.

PART 2 PRODUCTS

2.01 MANUFACTURERS

A. Acceptable manufacturer: Westcoat Specialty Coatings; 4007 Lockridge Street, San Diego, CA 92102. Telephone 800-250-4519. Website: www.westcoat.com.

2.02 MATERIALS

A. As basis of design Westcoat Shur Deck System (no substitutions will be accepted): Waterproof walking deck system that is reinforced with Metal or Glass Lath and installed with a series of separate polymer-modified cementitious applications, and sealed with acrylic topcoat.

2.03 COMPONENTS

A. Shur Deck System: Waterproof walking deck system for use over plywood substrates, IAPMO # 517.
   1. Sheet Membrane: WP-40 Sheet Membrane 6 inch by 75 feet for plywood seams, or 36 inch by 75 feet for complete plywood coverage.
   2. Lath: WP-30 Glass lath or WP-25 ALX Metal Lath 2.5 pounds per square yard hot dipped galvanized.
   3. Staples: Minimum 1 inch crown by $^5/_8$ inch long, 16 gauge non-corrosive WP-10 Staples or equal.
   4. Base Coat: Combine one 50lb bag of TC-11 Dry Polymer Basecoat Cement with 1 gallon of water. Apply by trowel at a rate of 30 ft^2 per batch when using WP-30 or 40 ft^2 per batch when using WP-25.
   5. Body Coat : The Body Coat is a two coat application. Combine 1 gallon of water to one 50 lb bag of TC-11 Dry Polymer Basecoat Cement. Trowel the material over the dry Base Coat surface at a rate of 80-90 ft^2 per mix. Allow the first coat to dry for a minimum of 2 hours before applying the second coat. Repeat the process for the 2nd coat as mentioned above
   6. (Optional Texture Coat): An optional Texture Coat can be applied over the Body Coat. Combine 1 gallon of water to one 50 lb bag of TC-11 Dry Polymer Basecoat Cement. Trowel the material over the Body Coat at a rate of 100-150 ft^2 per mix. Allow the Texture Coat to dry for a minimum of 2 hours before applying the Topcoat.
   7. Topcoat: Apply desired color of the SC-10 Topcoat in two coats. Apply first coat at the rate of 300-350 ft^2 per gallon. Allow to dry for 2 hours at 70°F, 50 percent relative humidity. The 2nd coat must be applied neat. Apply the second coat of the SC-10 perpendicular to the first at the rate of 300-350 ft^2 per gallon.

2.04 ACCESSORIES

A. Supplemental Materials:
   1. Flashing shall be minimum 26 gauge bonderized sheet metal, 4 inch by 6 inch at wall to deck juncture and 4 inch by 2 inch drip edge at outside perimeter of deck.
   2. Drains shall be WP-35 ALX Deck Drain available through Westcoat or Thunderbird Products. (www.thunderbirdproducts.com)
   3. Sealant shall be Westcoat WP-53 Hybrid Sealant.
   4. WP-43 Sheet Membrane is recommended for maximum adhesion.
   5. WP-40 36 inch Sheet Membrane can also be installed to the entire deck when maximum protection is required and when a Class I Vapor Retarder is required
   6. Westcoat Slope Technique may be used when additional sloping is required. Slope Technique should be applied after the Base Coat, prior to the Slurry Coat.

7. Westcoat WP Wrap can be used to provide additional waterproofing with reinforcement, along the perimeter of decks, over flashing and other challenging areas.
8. Optional Smooth Finish: TC-12 Shur Deck Fine Cement can be used in lieu of the TC-11 at 150-200 square feet per batch, depending on the desired texture and finish.
9. CA-29 Mini Safe Grip, CA-30 Small Safe Grip or CA-31 Large Safe Grip can be added to the SC-10 Acrylic Topcoat for added skid resistance.

PART 3 EXECUTION

3.01 EXAMINATION

A. Verification of conditions.
   1. Inspect all surfaces to receive the pedestrian traffic system. Verify that surfaces are dry, clean, and free of contaminates that would prevent coating system from properly adhering to the surface.
   2. Verify that substrates have ¼ inch slope per linear foot.
   3. Before starting work, report in writing to the owner any unsatisfactory conditions.

3.02 SURFACE PREPARATION

A. General:
   1. Prepare surfaces using methods recommended by the manufacturer for achieving the best result for the substrate under the project conditions.
B. Plywood substrate:
   1. Provide minimum 5/8 inch CDX exterior grade plywood.
   2. Plywood shall have a maximum joist span of 16 inches.
   3. Deflection should be less than L/360.

3.03 INSTALLATION

A. Install coatings in accordance with manufacturer's instructions.
B. Mix all materials in accordance with manufacturer's instructions.
C. Use application equipment, tools, and techniques in accordance with manufacturer's instructions.
D. Uniformly apply coatings at spread rates and in number of coats to achieve specified coverage.
E. Adhere to all limitations, instructions, and cautions for pedestrian coatings as stated in the manufacturer's published literature.

3.04 FIELD QUALITY CONTROL

A. Verify coatings and other materials are as specified.
B. Verify coverages and finish of the system as work progresses.
C. Manufacturer's representative shall provide technical assistance and guidance for surface preparation and application of coating systems.

3.05 PROTECTION AND CLEAN-UP

A. Installation areas must be kept free from traffic and other trades during the application procedure and cure time.
B. Protect finished surfaces of coating system from damage during construction.
C. Touch-up, repair or replace damaged coating system after substantial completion.
D. Clean area and remove all debris upon completion of work. Dispose of empty containers properly according to current Local, State and Federal regulations.
E. Allow material to cure 4 to 6 hours before light pedestrian traffic is permitted, 24 hours before heavy traffic and an additional 48 hours before heavy objects are placed on the surface.

3.06 MAINTENANCE

A. Contractor shall provide to owner, maintenance and cleaning instructions for the waterproof decking system upon completion of work. Owner is required to clean and maintain the surfaces to maintain manufacturer's warranty.

END OF SECTION

This guide specification has been prepared by Westcoat Specialty Coating Systems to assist design professionals in developing a project specific specification. This guide is a template that must be reviewed and adapted by specifiers to comply with project requirements. This guide specification is not to be copied directly into a project specification manual without review.

westcoat®

EVALUATION REPORT

4007 Lockridge St, San Diego, CA 92102 | 800-250-4519 | westcoat.com

WESTCOAT
4007 Lockridge Street
San Diego, CA 92102
(844)-537-7203
www.Westcoat.com

SHUR DECK, SHUR DECK PRO, SHUR DECK OVER CONCRETE, AND MER-KO SYSTEMS

CSI Sections:
07 18 13 Pedestrian Traffic Coatings
07 50 00 Membrane Roofing

1.0 RECOGNITION

The Westcoat Shur Deck, Shur Deck Pro, Shur Deck Over Concrete, and Mer-Ko Systems recognized in this report have been evaluated for use as walking deck and roof covering systems. The durability, impact resistance, weather resistance, wind uplift resistance, roof fire classification, and fire-resistance-rating properties of the Westcoat Shur Deck, Shur Deck Pro, Shur Deck Over Concrete, and Mer-Ko Systems were evaluated for compliance with the following codes:

- 2021, 2018, and 2015 International Building Code® (IBC)
- 2021, 2018, and 2015 International Residential Code® (IRC)
- 2022 California Building Code (CBC) – attached Supplement
- 2022 California Residential Code (CRC) – attached Supplement
- 2023 City of Los Angeles Building Code (LABC) – attached Supplement
- 2023 City of Los Angeles Residential Code (LARC) – attached Supplement

2.0 LIMITATIONS

Use of the Westcoat Shur Deck, Shur Deck Pro, Shur Deck Over Concrete, and Mer-Ko Systems recognized in this report is subject to the following limitations:

2.1 Westcoat Shur Deck, Shur Deck Pro, Shur Deck Over Concrete, and Mer-Ko Systems shall be manufactured, identified, and installed in accordance with this report and the applicable code. In the event of a conflict, the more restrictive governs.

2.2 Westcoat Shur Deck, Shur Deck Pro, Shur Deck Over Concrete, and Mer-Ko Systems shall be installed on slopes not less than ¼ inch per foot (2-percent slope).

2.3 The supporting structure shall be designed to support the loads and is beyond the scope of this report.

2.4 Connection of deck perimeter flashing to substrates shall be designed to meet all applicable code requirements.

2.5 The Westcoat Shur Deck, Shur Deck Pro, Shur Deck over Concrete, and Mer-Ko Systems are manufactured in San Diego, CA.

3.0 PRODUCT USE

3.1 General: The Westcoat Shur Deck, Shur Deck Pro, Shur Deck over Concrete, and Mer-Ko Systems recognized in this report are elastomeric walking deck and roof covering systems used directly over plywood or concrete substrates, as applicable.

3.2 Fire Classification Roof Assemblies: The Westcoat Shur Deck, Shur Deck Pro, Shur Deck Over Concrete, and Mer-Ko Systems are components of Class A roof assemblies when installed in accordance with this report at a minimum slope of ¼ inch per 1 foot (2-percent slope).

3.3 One-hour Fire-resistance-rated Floor(Roof)/Ceiling Assembly: The Westcoat Shur Deck, Shur Deck Pro, Shur Deck Over Concrete, or the Mer-Ko systems, when installed in accordance with Section 3.5 of this report over minimum $^{5}/_{8}$-inch-thick exterior-grade plywood, with minimum 2-by-8 solid sawn lumber joists spaced at 16 inches on center maximum, with all plywood joints blocked, may be used in place of the double wood floor described in Construction 13 of 2021, 2018, and 2015. Ceiling construction shall comply with Item Numbers 13-1.1 to 13-1.4 of 2021, 2018, and 2015.

3.4 Wind Resistance: Installation to plywood is limited on structures with a maximum height of 40 feet (12.2 m), for use in Exposure B areas subject to the following:

a) A basic wind speed of 130 miles per hour under the 2021 IBC and 2018 IBC.
b) A maximum design wind speed of 130 miles per hour under the 2021 IRC, 2018 IRC, 2015 IBC, and 2015 IRC.

The maximum allowable wind loads are limited by the capacity of the deck construction. The decking shall be designed to withstand wind pressures in accordance with Section 1609.5.1 of the IBC or Section R301.2.1 of the IRC.

The product described in this Uniform Evaluation Service (UES) Report has been evaluated as an alternative material, design or method of construction in order to satisfy and comply with the intent of the provision of the code, as noted in this report, and for at least equivalence to that prescribed in the code in quality, strength, effectiveness, fire resistance, durability and safety, as applicable, in accordance with Section 104.2.3 of the 2024 IBC and Section 104.11 of previous editions. This document shall only be reproduced in its entirety.

Copyright © 2025 by International Association of Plumbing and Mechanical Officials. All rights reserved. Printed in the United States. Ph: 1-877-4IESRPT • Fax: 909.472.4171 web: www.uniform-es.org • 4755 East Philadelphia Street, Ontario, California 91761-2816 – USA

3.5 Installation:

3.5.1 Westcoat Shur Deck, Shur Deck Pro, and Shur Deck Over Concrete Systems:

a) General: The Westcoat Shur Deck, Shur Deck Pro, and Shur Deck Over Concrete walking deck and roof covering systems shall be installed in accordance with the manufacturer's published installation instructions, the applicable code, and this report. In the event of a conflict, the more restrictive governs.

The system shall be applied where an ambient and surface temperature range of 50°F to 90°F is available for 24 hours. Materials shall not be applied when subject to wet weather. Substrates and all coating surfaces shall be structurally sound, clean, and dry. The minimum finished deck slope shall be ¼ inch per 1 foot (2-percent slope).

b) Plywood Substrates: Plywood substrates shall comply with Section 4.2.3 (d) of this report. All edges shall be blocked. Face plies shall be perpendicular to the supports. The plywood shall be attached to all blocking and end bearing framing with countersunk wood screws, screw- or ring-shank nails equivalent to 8d common nails, spaced 4 inches maximum, on center at sheet perimeters and 8 inches maximum, on center in the field. The plywood shall be installed at a maximum span of 16 inches on center. The plywood shall be dry, clean, and free of any foreign material such as oil, dust, grease, or paint.

c) Optional: WP-40 Sheet Membrane: The WP-40 Sheet Membrane, complying with Section 4.1.2 (e) of this report, may be applied over all plywood joints in 6-. 36-inch-wide strips may be applied over the entire plywood deck.

d) Glass Lath: The WP-30 Westcoat Glass Lath complying with Section 4.1.2 (g) of this report is applied perpendicular to plywood sheets. Glass Lath shall be installed over a metal flashing, stopping at least 1 inch from any deck edge or vertical juncture in the Shur Deck System and 2 inches in the Shur Deck Pro System. The lath seams shall be staggered a minimum of 2 inches from plywood joints with lath sheet ends staggered a minimum of 12 inches from any adjacent sheets. Lath shall be lapped 1 to 2 inches at seams and stapled to the plywood every 1 to 2 inches. A minimum of 22 WP-10 Staples, complying with Section 4.1.2 (i) of this report, per square foot, are required to attach the lath to the plywood substrate. WP-10 staples shall be placed from the center of the lath to the outside edges so as not to form bulges. High staples and lath edges shall be driven flush. The WP-25 Metal Lath may be used in lieu of the WP-30 Westcoat Glass Lath only for the Westcoat Shur Deck and Shur Deck Pro System on plywood substrates.

e) Concrete Substrates: When applying the Westcoat Shur Deck Over Concrete system over a concrete substrate, the WP-30 Westcoat Glass Lath or WP-25 Metal Lath are not required. Concrete substrates shall comply with Section 4.1.2 (j) of this report. Concrete surfaces shall be prepared by water blasting, grinding, or shot blasting as required to produce a clean, sound substrate, equal to a minimum CSP 3. All holes shall be cleaned and filled with TC-11 Dry Polymer Basecoat Cement or an appropriate Westcoat Underlayment. All high spots shall be removed by chipping or grinding. Concrete control joints shall comply with local building codes and comply with industry standards.

f) Base Coat: The Base Coat is prepared by mixing 1 gallon of water with one bag of TC-11 Dry Polymer Basecoat Cement complying with Section 4.1.2 (a) of this report. The mixture shall be troweled over the horizontal glass lath surface at a rate of 30 ft^2 per mix, to a minimum $^1/_8$-inch thickness over plywood and lath, and all-metal and plywood shall be completely covered, and surfaces shall be flat. When using the WP-25 Metal Lath complying with Section 4.2.3 (b), coverage to the surface shall be 40-45 ft^2 per mix. The Base Coat is brushed smoothly onto flashing and all vertical surfaces while applying the Base Coat to the horizontal surface. For concrete substrates, the Base Coat should be applied at 80-90 ft^2 per mix. The minimum thickness shall be $^1/_{16}$-inch. Prior to proceeding with the next layer, the base coat shall be allowed to cure firm. Applications in elevated humidity conditions will require additional drying time.

3.5.2 Shur Deck Pro and Shur Deck over Concrete Systems: As an option, to transition from Shur Deck to Shur Deck Pro and Shur Deck over Concrete, items (g) and (h) complying with Section 3.5.2 of this report are required to be applied over the dry Base Coat.

g) Waterproofing Membrane with Fabric Reinforcement (Flashing): WP-95 Waterproofing Membrane, complying with Section 4.1.2 (b) of this report, shall be applied onto vertical and adjacent horizontal surfaces using a brush or roller at a rate of 50 ft^2 per gallon. Immediately after the WP-95 has been applied and while the material is still wet, the WP-45 Flashing Fabric complying with Section 4.1.2 (d) of this report shall be installed fuzzy side down into the wet WP-95 material, overlapping successive runs of fabric edges and ends a minimum of 2 inches. Care is taken to ensure that the burlap is fitted tightly in corners and around protrusions. Additional WP-95 shall be applied as necessary over the burlap fabric to ensure positive waterproofing and that the burlap is completely covered. No dry or fabric material spots shall be visible, and the fabric shall be completely flat and without wrinkles. The waterproofing membrane shall be a total of at least 20 mils Dry Film Thickness.

h) Waterproofing Membrane with Fabric Reinforcement (Deck): WP-48 Tri-Directional Fiberlath, complying with Section 4.1.2 (c) of this report, shall be applied to the horizontal substrate. The WP-48 is rolled out, cut to size, and laid "curl side" down over the Base Coat. Overlap successive runs of WP-48 edges and ends a minimum of 2 inches. The WP-95 Waterproofing Membrane,

complying with Section 4.1.2 (b) of this report, is poured onto the WP-48 Tri-Directional Fiberlath and applied ensuring complete coverage of the WP-48 Tri-Directional Fiberlath. The coverage rate of the WP-95 material in this application is 60-65 ft^2 per gallon. Additional WP-95 shall be applied as necessary over areas to ensure positive waterproofing (no pinholes). An additional coat of the WP-95 Waterproofing Membrane material shall be applied over the entire surface at a rate of 140 to 150 ft^2 per gallon. The membrane shall dry a minimum of 24 hours or until dry enough to walk on without leaving impressions. Applications in elevated or high humidity conditions will require additional dry time. The waterproofing membrane shall be a total of at least 20 mils Dry Film Thickness.

3.5.3 Shur Deck System: The Shur Deck System shall follow the installation requirements in accordance with Section 3.5 of this report):

i) Body Coat: The Body Coat is a two-coat application and is prepared by mixing 1 gallon of water with each bag of TC-11 Dry Polymer Basecoat Cement complying with Section 4.1.2 (a) of this report. The first coat is brushed onto vertical areas and then troweled across the entire deck surface at a rate of 80 to 90 ft^2 per mix, and the second coat is applied at the same rate (80-90 ft^2 per mix). A minimum cure time of 2 hours between coats is required. The minimum total thickness of the Body Coat is $^1/_8$ inch. The Body Coat shall dry for a minimum of 2 hours at 70°F, 50 percent relative humidity. The surface may then be sanded to produce the desired level of finish. All dust and debris shall be removed.

j) Texture Coat: An optional Texture Coat is prepared by mixing 1 gallon of water with each bag of TC-11 Dry Polymer Basecoat Cement complying with Section 4.1.2 (a) of this report. The Texture Coat is applied to the surface at a rate of 100-150 ft^2 per bag, for a minimum $^1/_{16}$-inch thickness. The Texture Coat shall dry for a minimum of 2 hours drying time at 70°F, 50 percent relative humidity, and then the surface may be sanded to produce the desired level of finish. All dust and debris shall be removed.

k) Topcoat: The SC-10 Acrylic Topcoat complying with Section 4.1.2 (f) of this report shall be sprayed or rolled in two coats. The first coat shall be applied at the rate of 300 to 350 ft^2 per gallon and allowed to dry for 2 hours at 70°F, 50 percent relative humidity. Then a second coat of the SC-10 Acrylic Topcoat shall be applied perpendicular to the first at the rate of 300 to 350 ft^2 per gallon. The SC-10 Acrylic Topcoat shall be allowed 6 to 8 hours to dry before returning to light service and 24 hours for normal service (70°F, 50 percent relative humidity). For small areas or in locations with cool temperatures, one coat of the SC-10 may be applied at 150 to 175 ft^2 per gallon.

3.5.4 Westcoat Mer-Ko System

a) General: The Westcoat Mer-Ko walking deck and roof covering system shall be installed in accordance with the manufacturer's published installation instructions, the applicable code, and this report. In the event of a conflict, the more restrictive governs.

The system shall be applied where an ambient and surface temperature range of 55°F to 90°F is available for 24 hours. Materials shall not be applied when subject to wet weather. Substrates and all coating surfaces shall be structurally sound, clean, and dry. The minimum finished deck slope shall be ¼-inch per foot (2-percent slope).

b) Plywood: Plywood substrates shall comply with Section 4.3.2 (j) of this report. All edges shall be blocked. Face plies shall be perpendicular to the supports. The plywood shall be attached to all blocking and end bearing framing with countersunk wood screws, screw- or ring-shank nails equivalent to 8d common nails, spaced 4 inches maximum, on center at sheet perimeters and 8 inches maximum, on center in the field. The plywood shall be dry, clean, and free of any foreign material such as oil, dust, grease, or paint. Cracks in the plywood and all plywood joints should be filled by mixing 1.75 to 2 gallons of WP-89 Liquid Emulsion described in Section 4.3.2 (d) of this report with one bag of TC-14 Fine Deck Cement complying with Section 4.3.2 (e) of this report. The mixture shall then be applied and stricken flush before drying.

c) Concrete: Concrete substrates shall comply with Section 4.2.2 (m) of this report. Concrete surfaces shall be prepared using a power sprayer, grinder, or shot blast as required to produce a clean, sound substrate. All holes and joints shall be cleaned and filled with WP-53 Hybrid Sealant complying with Section 4.3.2 (c) of this report and tooled. A minimum 24 hours drying time at 70°F, and 50 percent relative humidity shall be observed before continuing with the application of the slip sheet.

d) Slip Sheet: WP-49 Mer-Ko Slip Sheet, complying with Section 4.3.2 (b) of this report, shall be applied over the entire deck maintaining a 2-inch distance from all vertical surfaces, parapets, drain openings, etc. The slip sheet edges shall lap a minimum of 2 inches, and end-of-roll terminations shall be staggered. A ¼ inch bead of WP-53 Hybrid Sealant, complying with Section 4.3.2 (c) of this report, shall be used to bond-slip sheet overlaps, the slip sheet to the deck perimeter, and the slip sheet at intermediate locations to limit the non-bonded area to a maximum of 4,000 ft^2. A minimum 24 hours drying time at 70°F, 50 percent relative humidity shall be observed before continuing with the installation of the primer coat.

e) Skim Coat: The Skim Coat is prepared by mixing one bag of TC-14 Fine Deck Cement complying with Section 4.3.2 (e) of this report, with 1.5 to 2 gallons of WP-89 Liquid Emulsion complying with Section 4.3.2 (d) of this report. The Skim Coat is applied by trowel over the entire horizontal substrate and adjacent flashing surfaces where bonding will occur, to a minimum $^1/_{32}$-inch thickness. A minimum two hours drying time at 70°F, 50 percent relative

humidity shall be observed before continuing with the application of the waterproof membrane. Minor surface imperfections shall be treated by scraping and or sanding. All dust and debris shall be removed.

f) Waterproofing Membrane with Fabric Reinforcement (Flashing): A coat of WP-95 Waterproofing Membrane, complying with Section 4.3.2 (a) of this report, shall be applied onto vertical and adjacent horizontal surfaces using a brush or roller at a rate of 50 ft^2 per gallon. Immediately after the WP-95 has been applied and while the material is still wet, the WP-45 Flashing Fabric complying with Section 4.3.2 (h) of this report shall be installed fuzzy side down into the wet WP-95, overlapping successive runs of fabric edges and ends a minimum of 2 inches. Care is taken to ensure that the burlap is fitted tightly in corners and around protrusions. Additional WP-95 Waterproofing Membrane material is applied as necessary over the burlap fabric to ensure positive waterproofing (no pinholes) and that the burlap is completely covered. No dry or fabric material spots shall be visible and the fabric shall be completely flat and without wrinkles.

g) Waterproofing Membrane with Fabric Reinforcement (Deck): The WP-48 Tri-Directional Fiberlath, complying with Section 4.3.2 (f) of this report, shall be applied to the horizontal surfaces. The WP-48 is rolled out, cut to size, and laid "curl side" down over the Base Coat. Successive runs of WP-48 edges and ends shall be overlapped a minimum of 2 inches. The WP-95 Waterproofing Membrane liquid, complying with Section 4.3.2 (a) of this report, shall be poured onto the WP-48 Tri-Directional Fiberlath and trowel smooth ensuring complete coverage of the WP-48 Tri-Directional Fiberlath. The coverage rate oft the WP-95 in this application is 45-50 ft^2 per gallon. Additional WP-95 Waterproofing Membrane liquid is applied as necessary over areas to ensure positive waterproofing (no pinholes). An additional coat of the WP-95 Waterproofing Membrane liquid is applied over the entire surface at a rate of 130 to 140 ft^2 per gallon by trowel or roller. The membrane shall dry for a minimum of 24 hours or until dry enough to walk on without leaving impressions. Applications in elevated or high humidity conditions will require additional dry time. The waterproofing membrane shall be a total of at least 20 mils Dry Film Thickness.

h) Body Coat: The Body Coat is a two-coat application and is prepared by mixing 1 to 1.25 gallons of WP-89 Liquid Emulsion complying with Section 4.3.2 (d) of this report to one bag of TC-13 Coarse Deck Cement complying with Section 4.3.2 (h) of this report. The first coat is troweled across the dry membrane at a rate of 80 to 90 ft^2 per mix, and the second coat is applied at the same rate (80-90 ft^2 per mix). A minimum cure time of 2 hours between coats is required. The minimum total thickness of the Body Coat is $^1/_8$ inch. The Body Coat shall dry for a minimum of 4 hours at 70°F, 50 percent relative humidity. Minor surface imperfections shall be removed by lightly scraping or sanding. All dust and debris shall be removed.

i) Smoothing Coat: The Smoothing Coat is a mixture of 1.5 to 2 gallons of WP-89 Liquid Emulsion, complying with Section 4.2.2 (e) of this report, to one 40 lb. bag of TC-14 Fine Deck Cement, complying with Section 4.3.2 (e) of this report. The mixture is applied over all vertical and horizontal surfaces at a rate of 150-200 ft^2 per mix, producing a minimum $^1/_{32}$-inch thickness. Optionally, for texture or an extra smooth surface, a second coat is applied. The first coat needs to dry a minimum of two hours before proceeding with any second application. The final coat shall dry a minimum of 24 hours at 70°F, 50 percent relative humidity, and then the surface may be sanded to produce the desired level of finish. All dust and debris shall be removed.

j) Topcoat: Two coats of the SC-10 Acrylic Topcoat, complying with Section 4.3.2 (i) of this report, shall be applied by a roller at the rate of 300 to 350 ft^2 per gallon. After allowing the first coat to dry a minimum of 2 hours at 70°F, 50 percent relative humidity, the second coat of SC-10 shall be applied perpendicular to the first coat. Allow 6 to 8 hours to dry before returning to light service, 24 hours for normal service. For small areas or in locations with cool temperatures, one coat of the SC-10 may be applied at 150 to 175 ft^2 per gallon.

4.0 PRODUCT DESCRIPTION

4.1 Westcoat Shur Deck Standard (Over Concrete)

4.1.1 General: Westcoat Shur Deck walking deck and roof covering system is an elastomeric, multi-layer protective coating system for use over concrete. The system consists of reinforcing metal lath, cementitious filler, reinforced latex waterproofing membrane, and acrylic sealer.

4.1.2 Components:

a) TC-11 Dry Polymer Basecoat Cement: The TC-11 is a blend of cement, sand, and polymers, delivered in 50-pound bags. The shelf life is one year maximum when stored in unopened bags in dry locations out of direct sunlight at temperatures ranging from 40ºF to 100ºF.

b) WP-95 Waterproofing Membrane: The WP-95 is an asphalt-modified latex elastomer liquid, delivered in 5-gallon pails. The shelf life is one year maximum when stored in unopened pails in dry locations out of direct sunlight at temperatures ranging from 40ºF to 100.

c) WP-48 Tri-Directional Fiberlath: The fiberlath is delivered in rolls measuring 38 inches wide with a coverage of 475 square feet.

d) WP-45 Flashing Fabric: The WP-45 is delivered in rolls measuring 10 inches wide with coverage of 300 linear feet.

e) WP-40 Sheet Membrane: The WP-40 Sheet membrane is a self-adhering, nominally 40-mil-thick, reinforced modified bituminous membrane with a white-colored reflective topping applied to the top surface. The membrane is produced in 6-inch-wide- and 36-inch-wide-by-75-foot-long rolls.

f) SC-10 Acrylic Topcoat : The SC-10 is a pigmented acrylic liquid, delivered in 5-gallon pails. The shelf life is two years maximum when stored in unopened pails in dry locations out of direct sunlight at temperatures ranging from 40ºF to 100ºF.

g) WP-30 Westcoat Glass Lath: The WP-30 is delivered in rolls measuring 39 inches wide with a coverage rate of 490 sq. ft.

h) WP-10 Staples: The WP-10 shall comply with ASTM F1667 and shall have a minimum ⅝ inch leg, a minimum 1-inch crown, and be formed from hot-dip galvanized or electro-galvanized steel wire having a Class 1 coating weight in conformance with A641 or Types 302, 304, 305, or 316 stainless steel wire.

i) Concrete: Concrete shall comply with the IBC or IRC as normal-weight, with a minimum specified compressive strength, f_c', of 3,000 psi.

j) Permeability: Shur Deck Over Concrete, Shur Deck Pro, or Shur Deck with full coverage of WP-40 has a water vapor permeance rating of 0.1 perm or less when tested in accordance with ASTM E96 Procedure A (Desiccant Method) at 73.4° F (23° C) and 50 percent relative humidity.

4.2 Westcoat Shur Deck and Westcoat Shur Deck Pro (Over Plywood)

4.2.1 Westcoat Shur Deck: Westcoat Shur Deck for use over plywood shall use the following components in addition to the applicable items listed in Sections 4.1.2 (a) through (h), except for the WP-95 Waterproofing Membrane, WP-48Westcoat Lath and WP-45 Flashing Fabric listed in Section 4.1.2 (b), Section 4.1.2 (c), and Sections 4.1.2 (d), respectively. Westcoat Shur Deck has the option to use TC-12 and WP-25 as listed in Section 4.2.3 (a) and Section 4.2.3 (b) of this report.

4.2.2 Westcoat Shur Deck Pro: Westcoat Shur Deck Pro for use over plywood shall use the following components in addition to the applicable items listed in Sections 4.1.2 (a) through (h). Westcoat Shur Deck Pro has the option to use TC-12 and WP-25 as listed in Section 4.2.3 (a) and Section 4.2.3 (b) of this report.

4.2.3 Components:

a) Optional: TC-12 Shur Deck Fine Cement: The TC-12 has the same shelf life as the TC-11, but with a fine texture finish.

b) Optional WP-25 Metal Lath: The Metal lath shall be 2.5 pounds per square yard, in accordance with ASTM C847. The lath is delivered in sheets measuring 27 inches wide by 97 inches long.

c) Plywood: Plywood, with an exterior bond classification, conforming to DOC PS-1 or DOC PS-2, shall be a minimum of ⅝ inch thick.

4.3 Westcoat Mer-Ko System

4.3.1 General: The Westcoat Mer-Ko walking deck and roof covering system is an elastomeric, multi-layer protective coating system for use over plywood or concrete substrates. The consists of a sealant, slip sheet, skim coat, waterproofing membrane, fabric, body coat, smoothing coat, and topcoat.

4.3.2 Components:

a) WP-95 Waterproofing Membrane: The WP-95 is an asphalt-modified latex elastomer liquid, delivered in 5-gallon pails. The shelf life is one year maximum when stored in unopened pails in dry locations out of direct sunlight at temperatures ranging from 40ºF to 100ºF.

b) WP-49 Mer-Ko Slip Sheet: The WP-49 is a heavy-weight fibrous mat coated with SBS-modified asphalt delivered in rolls with a coverage of 216 square feet.

c) WP-53 Hybrid Sealant: The WP-53 is a synthetic co-polymer rubber-high solids adhesive delivered in 10-ounce cartridges and 20-ounce sausages. The shelf life is one year maximum when stored in unopened tubes in dry locations out of direct sunlight at temperatures ranging from 40ºF to 100ºF.

d) WP-89 Liquid Emulsion: The WP-89 is an elastomeric latex polymer liquid, delivered in 5-gallon pails. The shelf life is two years maximum when stored in unopened pails in dry locations out of direct sunlight at temperatures ranging from 40ºF to 100ºF.

e) TC-14 Fine Deck Cement: The TC-14 is a blend of Portland cement and sand delivered in 40-pound bags. The shelf life is one year maximum when stored in unopened bags in dry locations out of direct sunlight at temperatures ranging from 40ºF to 100ºF.

f) WP-48 Tri-Directional Fiberlath: The fiberlath is delivered in rolls measuring 38 inches wide with a coverage of 475 square feet.

g) WP-45 Flashing Fabric : The WP-45 is delivered in rolls measuring 10 inches wide with coverage of 300 linear feet.

h) TC-13 Coarse Deck Cement: The TC-13 is a blend of Portland cement and sand, delivered in 50-pound bags. The shelf life is one year maximum when stored in unopened bags

in dry locations out of direct sunlight at temperatures ranging from 40ºF to 100ºF.

i) SC-10 Acrylic Topcoat : The SC-10 is a pigmented acrylic liquid, delivered in 5-gallon pails. The shelf life is two years maximum when stored in unopened pails in dry locations out of direct sunlight at temperatures ranging from 40ºF to 100ºF.

j) Plywood: Plywood, with an exterior bond classification, conforming to DOC PS-1 or DOC PS-2, shall be a minimum of ⅝ inch thick.

k) Concrete: Concrete shall comply with the IBC or IRC as normal-weight, with a minimum specified compressive strength, f_c', of 3,000 psi.

l) Permeability: Mer-Ko System has a water vapor permeance rating of 0.1 perm or less when tested in accordance with ASTM E96 Procedure A (Desiccant Method) at 73.4° F (23° C) and 50 percent relative humidity.

5.0 IDENTIFICATION

Product packaging shall include the company name or trademark, product name or model number, and the IAPMO UES Evaluation Report Number (IAPMO UES ER-517) to identify the products recognized in this report. Either IAPMO UES Mark of Conformity may also be used as shown below:

or

IAPMO UES ER-517

6.0 SUBSTANTIATING DATA

6.1 Data in accordance with the ICC-ES Acceptance Criteria for Walking Decks (AC39) approved June 2017, editorially revised November 2020.

6.2 Reports of testing for compliance with the Standard Test Methods for Water Vapor Transmission of Materials in accordance with ASTM E96.

6.3 Test reports are from laboratories in compliance with ISO/IEC 17025.

7.0 STATEMENT OF RECOGNITION

This evaluation report describes the results of research completed by IAPMO Uniform Evaluation Service on the Westcoat Shur Deck, Shur Deck Pro, Shur Deck Over Concrete, and Mer-Ko walking deck and roof covering systems, with the Westcoat by Westcoat label, to assess conformance to the codes and standards shown in Section 1.0 of this report and documents the product's certification. Products are manufactured at locations noted in Section 2.5 of this report under a quality control program with periodic inspections under the supervision of IAPMO UES.

For additional information about this evaluation report please visit www.uniform-es.org or email us at info@uniform-es.org

CALIFORNIA SUPPLEMENT

WESTCOAT
4007 Lockridge Street
San Diego, CA 92102
(844)-537-7203
www.Westcoat.com

WESTCOAT SHUR DECK, SHUR DECK PRO, AND MER-KO SYSTEMS

CSI Sections:
07 18 13 Pedestrian Traffic Coatings
07 50 00 Membrane Roofing

1.0 RECOGNITION

The Westcoat Shur Deck, Shur Deck Pro, and Mer-Ko Systems described in IAPMO UES ER-517 and in this report supplement have been evaluated for use as walking deck and roof covering systems. The durability, impact resistance, weather resistance, wind uplift resistance, roof fire classification, and fire-resistance-rating properties of the Westcoat Shur Deck, Shur Deck Pro, and Mer-Ko Systems were evaluated for compliance with the following codes:

- 2022 California Building Code (CBC)
- 2022 California Residential Code (CRC)

2.0 LIMITATIONS

Use of The Westcoat Shur Deck, Shur Deck Pro, Shur Deck Over Concrete, and Mer-Ko Systems recognized in this supplement are subject to the following limitations:

2.1 For use under 2022 CBC and 2022 CRC, the Mer-Ko Systems shall comply with the provisions applicable to the 2021 IBC or 2021 IRC in IAPMO UES ER-517.

2.2 The Westcoat Shur Deck, Shur Deck Pro, and Mer-Ko Systems may be used as Class A roof covering systems in accordance with Sections 1505.2 of the CBC or R902.1 of the CRC.

2.3 Only the Westcoat Shur Deck and Shur Deck Pro Systems have been evaluated for use in buildings located in a Fire Hazard Severity Zone within State Responsibility Areas or any Wildland-Urban Interface Fire Area in accordance with Chapter 7A of the CBC or Section R337 of the CRC. The Westcoat Shur Deck and Shur Deck Pro Systems comply with the requirements when tested in accordance with ASTM E2632 and ASTM E2726.

2.4 This supplement expires concurrently with IAPMO UES ER-517.

For additional information about this evaluation report please visit www.uniform-es.org or email us at info@uniform-es.org

CITY OF LOS ANGELES SUPPLEMENT

WESTCOAT
4007 Lockridge Street
San Diego, CA 92102
(844)-537-7203

WESTCOAT SHUR DECK, SHUR DECK PRO, SHUR DECK OVER CONCRETE AND MER-KO SYSTEMS

CSI Sections:
07 18 13 Pedestrian Traffic Coatings
07 50 00 Membrane Roofing

1.0 RECOGNITION

The Westcoat Shur Deck, Shur Deck Pro, Shur Deck Over Concrete, and Mer-Ko Systems described in IAPMO UES ER-517, the California Supplement to IAPMO UES ER-517, and this supplemental report have been evaluated for use as walking deck and roof covering systems. The durability, impact resistance, weather resistance, wind uplift resistance, roof fire classification, and fire-resistance-rating properties of the Westcoat Shur Deck, Shur Deck Pro, Shur Deck Over Concrete, and Mer-Ko Systems were evaluated for compliance with the following codes:

- 2023 City of Los Angeles Building Code (LABC)
- 2023 City of Los Angeles Residential Code (LARC)

2.0 LIMITATIONS

Use of The Westcoat Shur Deck, Shur Deck Pro, Shur Deck Over Concrete, and Mer-Ko Systems recognized in this supplement are subject to the following limitations:

2.1 The Westcoat Shur Deck, Shur Deck Pro, Shur Deck Over Concrete, and Mer-Ko Systems shall comply with the provisions in the California Supplement applicable to the 2022 CBC for use under the 2023 LABC.

2.2 The Westcoat Shur Deck, Shur Deck Pro, Shur Deck Over Concrete, and Mer-Ko Systems may be used as Class A roof covering systems in accordance with Sections 1505.2 of the 2023 LABC or R902.1 of the 2023 LARC.

2.3 The Westcoat Shur Deck, Shur Deck Pro, Shur Deck Over Concrete, and Mer-Ko Systems shall be installed on slopes not less than ¼ inch per foot (2-percent slope).

2.4 The supporting structure shall be designed to support the loads and is beyond the scope of this report.

2.5 The Westcoat Shur Deck, Shur Deck Pro, Shur Deck Over Concrete, and Mer-Ko Systems shall have a minimum substrate of $^{5}/_{8}$-inch-thick exterior-grade plywood.

2.6 The Westcoat Shur Deck, Shur Deck Pro, Shur Deck Over Concrete, and Mer-Ko Systems shall comply with the LADBS Information Bulletin P/BC 2020-016 (Dwellings in High Wind Velocity Areas (HWA)).

2.7 This supplement expires concurrently with IAPMO UES ER-517.

For additional information about this evaluation report please visit www.uniform-es.org or email us at info@uniform-es.org

westcoat®

COLOR CHART

4007 Lockridge St, San Diego, CA 92102 | 800-250-4519 | westcoat.com

westcoat®
SPECIALTY COATING SYSTEMS

SC-10 ACRYLIC TOPCOATS

Porcelain | 75

Travatan | 40

Arizona Tan | 82

Sandy Beige | 78

Sand | 11

Omaha Tan | 53

Spanish Brown | 43

Deep Tan | 27

Cashew | 79

Rosewood | 77

Espresso | 74

Mission Red | 76

Concrete Gray | 52

Rocky Nook | 26

Pewter Gray | 12

Tile Red | 34

Cape Cod Gray | 41

Anchor Gray | 80

Stone Gray | 42

Slate Blue | 14

Black and White also available. See SC-10 Topcoat color chart online for more information, colors and lead time.

CAUTION: Color will vary between products and sheens. This chart is for reference only. Please request an actual color sample or apply sample on site before beginning any project.

westcoat®

SAMPLE WARRANTY

4007 Lockridge St, San Diego, CA 92102 | 800-250-4519 | westcoat.com

WARRANTY

SHUR DECK
MATERIAL WARRANTY

Project Address QCA Contractor/ Applicator

Subject to the conditions, limitations and requirements set forth below, Westcoat warrants the Shur Deck materials to be free of defects in the material for a period of five (5) years from the date of original purchase of the materials provided that the materials are installed by a factory trained state-licensed contractor and subject to all terms and conditions set forth below. Westcoat disclaims any warranty for the labor or installation of the Shur Deck materials.

If the Shur Deck materials fail due to defects within the warranty period, Westcoat, in its sole discretion, will either provide replacement materials for the defective Shur Deck materials or reimburse the original purchaser in an amount not to exceed the original cost of the materials. Westcoat shall in no way be responsible or liable for any labor costs or any incidental or consequential damages, including without limitation, economic losses, lost profits, business interruption, loss of use, contribution, indemnity or other losses arising from the use of the Shur Deck materials.

This warranty is limited to the original purchases and is non-transferable. This warranty is void if the Shur Deck materials are: applied to the top of OSB; not properly maintained; not installed pursuant to the current system information sheet; and/or applied at any area that is not built in accordance with applicable building codes. The warranty is also void if all of the materials are not purchased from an authorized distributor of Westcoat.

This warranty does not apply to and Westcoat has no responsibility or liability for: (1) the condition or movement of the substrate; (2) parts, products, or accessories not sold by Westcoat such as sheet metal flashings, scuppers and drains; (3) the loss of gloss, fading or cleaning; (4) repairs and/or maintenance of the sealer and texture coat (5) the application of its materials over an oriented strand board (”OSB”) substrate; (6) abuse or misuse of the materials: or (7) improper installation.

THIS MATERIAL WARRANTY AND THE REMEDIES PROVIDED HEREUNDER ARE EXCLUSIVE AND GIVEN IN LIEU OF ALL OTHER WARRANTIES (WHETHER WRITTEN, ORAL, IMPLIED OR STATUTORY). THERE ARE NO OTHER WARRANTIES, EITHER EXPRESSED OR IMPLIED, INCLUDING BUT NOT LIMITED TO, WARRANTIES OF MERCHANTABILITY AND FITNESS FOR A PARTICULAR PURPOSE, THAT EXTEND BEYOND THAT SPECIFICALLY DESCRIBED HEREIN. PURCHASER’S SOLE AND EXCLUSIVE REMEDY AGAINST THE MANUFACTURERS OF WESTCOAT, INCLUDING CLAIMS BASED UPON THE MANUFACTURER’S NEGLIGENCE OR STRICT LIABILITY, SHALL BE LIMITED SOLELY TO THE REPLACEMENT OF ANY DEFECTIVE SHUR DECK MATERIAL OR A PAYMENT BY THE MANUFACTURER IN AN AMOUNT EQUAL TO THE COST OF THE ORIGINAL SHUR DECK MATERIAL.

The Westcoat Shur Deck system requires a maintenance topcoat with WESTCOAT ACRYLIC TOPCOAT as specified every three to five years (depending on ultraviolet exposure and/or traffic) as determined by a licensed contractor or design professional. Inspections are required one year after installation and every two years thereafter by a licensed contractor or design professional. The record of the inspection must be kept in writing and entitlement to the benefits of this warranty require the purchaser to show proof of purchase of the materials and the record of inspection(s).

All claims arising from any defect in the Shur Deck materials or under this Warranty shall be made, in writing, to Westcoat within ninety (90) days of the discovery of the alleged defect and within the time period of this warranty. Upon notification, Westcoat shall have the right to inspect and determine course of repair. The absence of a written claim within this time period shall constitute a waiver of all claims, rights and damages against Westcoat, and its affiliates. This warranty shall not toll or extend any statute of limitation applicable to a claim of negligence, breach of contract or strict liability against Westcoat.

Any and all disputes, claims or damages arising out of the use of Shur Deck materials or this Warranty shall be arbitrated in the County of San Diego, State of California, utilizing the services of a neutral dispute resolution service upon which the purchaser and Westcoat agree, or if they cannot agree, utilizing the services of the American Arbitration Association. The purchaser and Westcoat hereby waive any right they may have to have a jury decide any dispute.

SAMPLE

westcoat®

GENERAL MAINTENANCE

4007 Lockridge St, San Diego, CA 92102 | 800-250-4519 | westcoat.com

westcoat®
SPECIALTY COATING SYSTEMS

CARE & MAINTENANCE

EXTERIOR COATINGS

Westcoat exterior coating systems (including such systems as: ALX, ALX Pro, MACoat, Texture-Crete, etc.) offer durable, high-performance, long lasting surfaces, that are designed to provide years of service against normal wear and usage. To extend the service life of your Westcoat system, it is recommended to implement a routine cleaning regimen and have periodic deck inspections. This information is a basic guideline only.

Routine Cleaning

All coating systems require maintenance and upkeep to ensure continued performance and to maximize the life of the system. Maintenance methods may vary depending on the system, texture, topcoat or sealer, environment conditions, slope, drainage, volume and type of traffic, and use of space.

Ensure that the coating surface is free from debris, such as sand, gravel, metals, or other abrasives that can result in premature wear of the topcoat or sealer. Grease, oils, and other contaminants should be removed regularly to maintain the surface.

Be sure to test all cleaning agents in an unnoticeable area to ensure compatibility. Refer to the manufacturer's instructions and dilution rates for all cleaning agents. Routine cleaning can be achieved by using a mild cleaning solution, such as "Simple Green" or mild soap. Utilize a brush or broom to help agitate and loosen up dirt and debris. Ensure that the surface is rinsed with clean water thoroughly. Do not allow cleaning agents to dry on the surface.

A low psi pressure washer (do not exceed 1000 psi) equipped with fan tip, and/or a soft bristle, floor scrubber brush on a floor machine may be used to help aid in cleaning. Do not use metal-based or coarse brushes, as they may damage the surface.

To remove water stains from calcium or lime build up, 100 grain vinegar can be used. Start by diluting the vinegar, eight parts water to one part vinegar. If needed, you can use the vinegar diluted one to one with water. Avoid using neat or full strength 100 grain vinegar. Scrub the diluted vinegar mixture over the surface. Be sure to completely rinse any residue thoroughly with clean water. Avoid using vinegar mixture or any cleaner in direct sunlight, as direct sun may evaporate cleaning solution and may leave a film or residue on the surface.

Any information provided by Westcoat Specialty Coating Systems is for general purposes only. Nothing presented by Westcoat Specialty Coating Systems constitutes design advice or a recommendation specific to a particular situation. Westcoat Specialty Coating Systems directs you to consult with the appropriate qualified design professional to ensure any product or information meets the requirements for the specific intended use, and complies with all building plans, specifications, codes or regulations. Westcoat Specialty Coating Systems expressly and specifically disclaims responsibility for any damages arising from the use of any information, and each recipient of this information agrees that there is no express or implied warranty, including any implied warranty of merchantability or fitness for a particular purpose, arising from any information provided by Westcoat Specialty Coating Systems.

EXTERIOR COATINGS

Maintenance and Inspections

All exterior coating systems should be periodically inspected and regularly maintained by a Westcoat Qualified Contractor Applicator (QCA). Inspections are required one year after installation and every two years thereafter by a factory authorized representative. After 3-5 years, a "reseal" (thorough cleaning and reapplication of Westcoat topcoat/sealer) may be required. Existing sealer or coating should be lightly abraded before application of topcoat or sealer. Some topcoats and sealers may require additional preparation, prior to recoating. Should damage occur, be sure to contact the original Westcoat applicator to inspect and repair the coating system immediately.

Best Practices

- Do not expose the coating surface to traffic, moisture or chemical agents until system is fully cured.
- Outdoor carpet or other matting materials are not recommended, as they may trap moisture, contribute to mildew, mold and may damage the topcoat or sealer.
- Potted plants and/or planter boxes should be elevated off the surface and moved monthly to allow the coating to dry properly. Planter drainage may cause staining due to fertilizers and growing mediums. Drip pans or saucers should be utilized.
- Outdoor furniture should have coasters or pads to prevent indentations and damage to the coating.
- If barbecues are to be used, it is recommended to place a protective pan down to prevent damage from hot grease or coals.
- Do not cut, slice, or puncture the coating system. This is especially true for all waterproofing systems, such ALX, ALX Pro and MACoat.
- Avoid dragging bulky metal, concrete, or other types of objects over the surface.
- Fire pits are not recommended for use with Westcoat coating systems.
- Do not expose the coating system to solvents, harsh chemicals, or acids.
- Avoid subjecting the coating system to repeated heavy rolling loads.
- Tape or other adhesives should not be applied to finished surfaces.

Any information provided by Westcoat Specialty Coating Systems is for general purposes only. Nothing presented by Westcoat Specialty Coating Systems constitutes design advice or a recommendation specific to a particular situation. Westcoat Specialty Coating Systems directs you to consult with the appropriate qualified design professional to ensure any product or information meets the requirements for the specific intended use, and complies with all building plans, specifications, codes or regulations. Westcoat Specialty Coating Systems expressly and specifically disclaims responsibility for any damages arising from the use of any information, and each recipient of this information agrees that there is no express or implied warranty, including any implied warranty of merchantability or fitness for a particular purpose, arising from any information provided by Westcoat Specialty Coating Systems.

4007 Lockridge St ▪ San Diego, CA 92102
800-250-4519 ▪ Fax 619-255-7187 ▪ westcoat.com

westcoat®

ARCHITECTURAL DETAILS

4007 Lockridge St, San Diego, CA 92102 | 800-250-4519 | westcoat.com

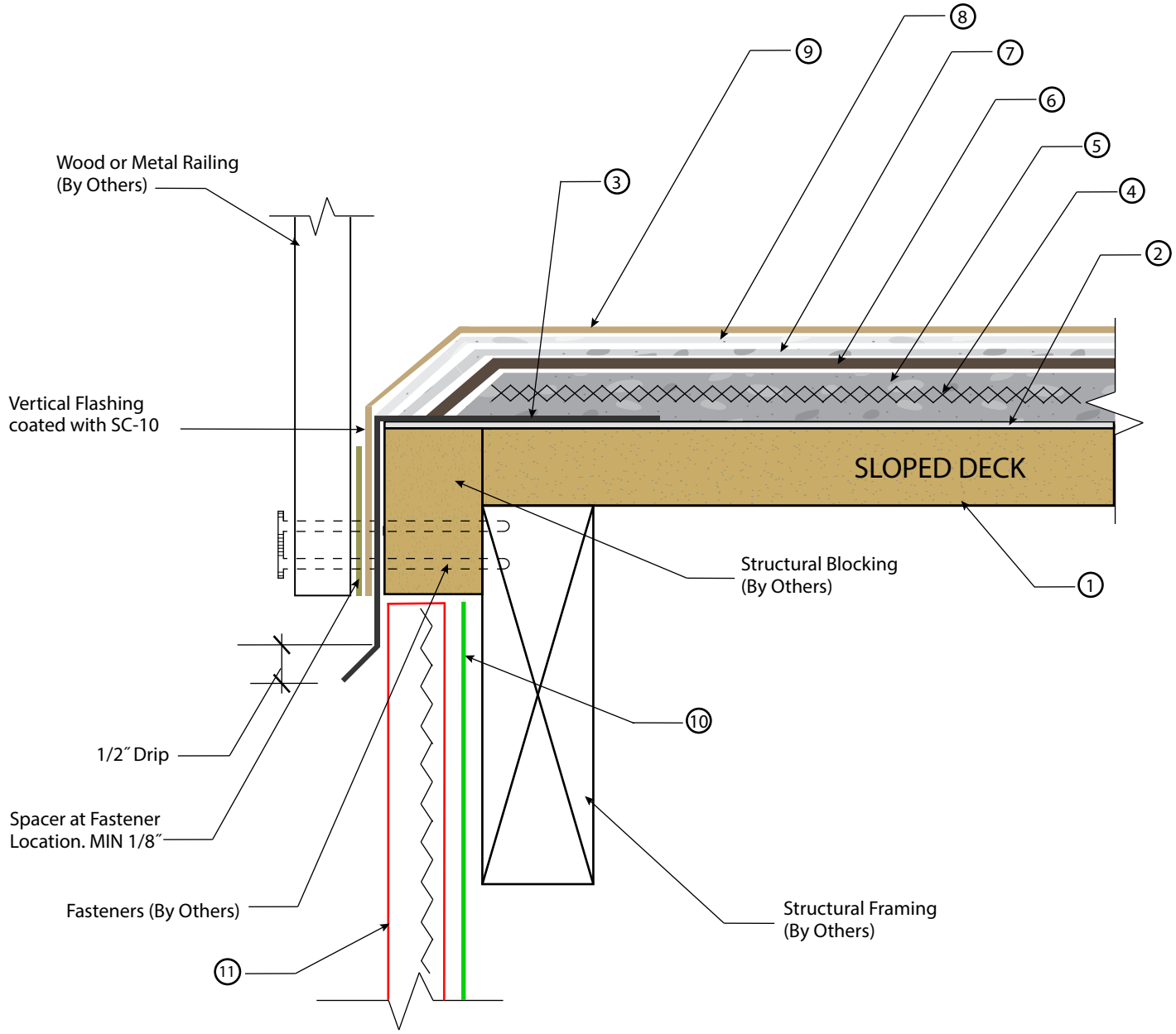

REV. 8/14/25 TC

KEYNOTES

1. 5/8″ MIN. Exposure 1 Sheathing (3/4″ Recommended)
2. WP-40 Sheet Membrane (6″ or 36″)
3. 26 Gauge, Bonderized Flashing MIN. 4″ on deck and 6″ height.
4. WP-25 Metal or WP-30 Glass Lath
5. Base Coat
6. WP-95 Membrane & Fabric (Pro System)
7. Body Coat
8. Texture Coat (Optional)
9. SC-10 Topcoat
10. Building Paper (By Others)
11. Finish (By Others)

IAPMO ER - 517

- Standard overlap is bottom to top with a 4″ overlap.
- For maximum adhesion, WP-43 Sheet Membrane Primer should be used.
- Apply WP-53 on all flashing seams and overlaps.
- Minimum 5/8″ exterior grade plywood.
- Minimum 1/4″ slope required on all decks
- Refer to local building codes and standards.
- Refer to system and product specification sheets.

All details are for reference only and should be evaluated by architect. These details are not a substitute for specifications, plans or evaluation reports. Architect, consultant or similar professional should be review prior to major waterproofing applications.

SHUR DECK SYSTEM - SIDE MOUNTED DECK RAILING

DIVISION 07 18 13
Pedestrian Traffic Coatings

SCALE : NTS

westcoat®
SPECIALTY COATING SYSTEMS
4007 Lockridge Street • San Diego, CA • 92102
800.250.4519 • westcoat.com

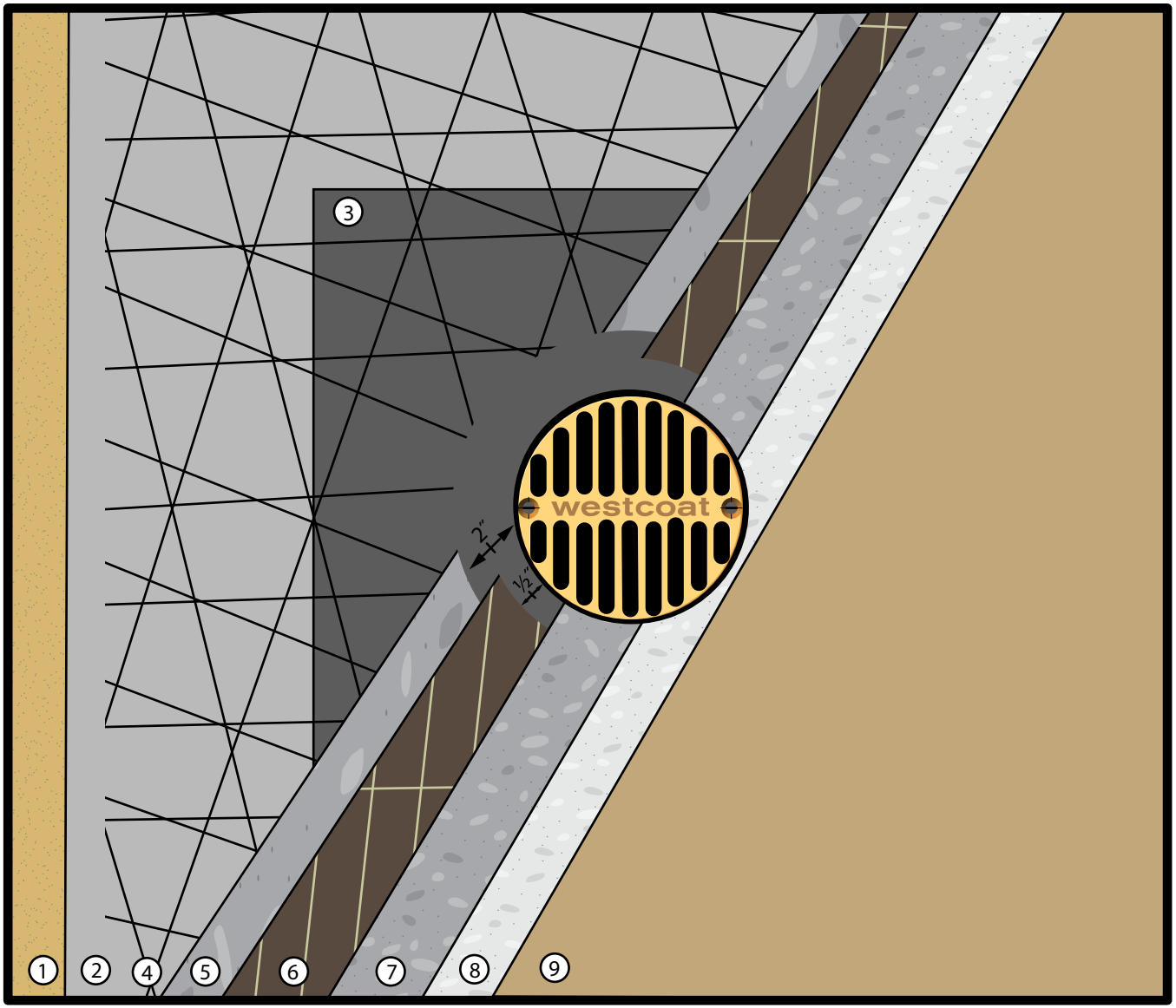

KEYNOTES

1. Exterior Grade Plywood
2. WP-40 Sheet Membrane
3. WP-35 ALX Drain (By Westcoat)
4. WP-25 Metal or WP-30 Glass Lath
5. Base Coat
6. WP-95 Membrane & Fabric (PRO)
7. Body Coat
8. Texture Coat (Optional)
9. SC-10 Acrylic Topcoat

IAPMO ER - 517

- Standard overlap is bottom to top with a 4″ overlap.
- For maximum adhesion, WP-43 Sheet Membrane Primer should be used.
- Apply WP-53 on all flashing seams and overlaps.
- Minimum 5/8″ exterior grade plywood.
- Minimum 1/4″ slope required on all decks
- Refer to local building codes and standards.
- Refer to system and product specification sheets.

All details are for reference only and should be evaluated by architect. These details are not a substitute for specifications, plans or evaluation reports. Architect, consultant or similar professional should be review prior to major waterproofing applications.

REV. 8/14/25 TC

SHUR DECK SYSTEM - DRAIN DETAIL

DIVISION 07 18 13
Pedestrian Traffic Coatings

SCALE : NTS

westcoat®
SPECIALTY COATING SYSTEMS
4007 Lockridge Street • San Diego, CA • 92102
800.250.4519 • westcoat.com

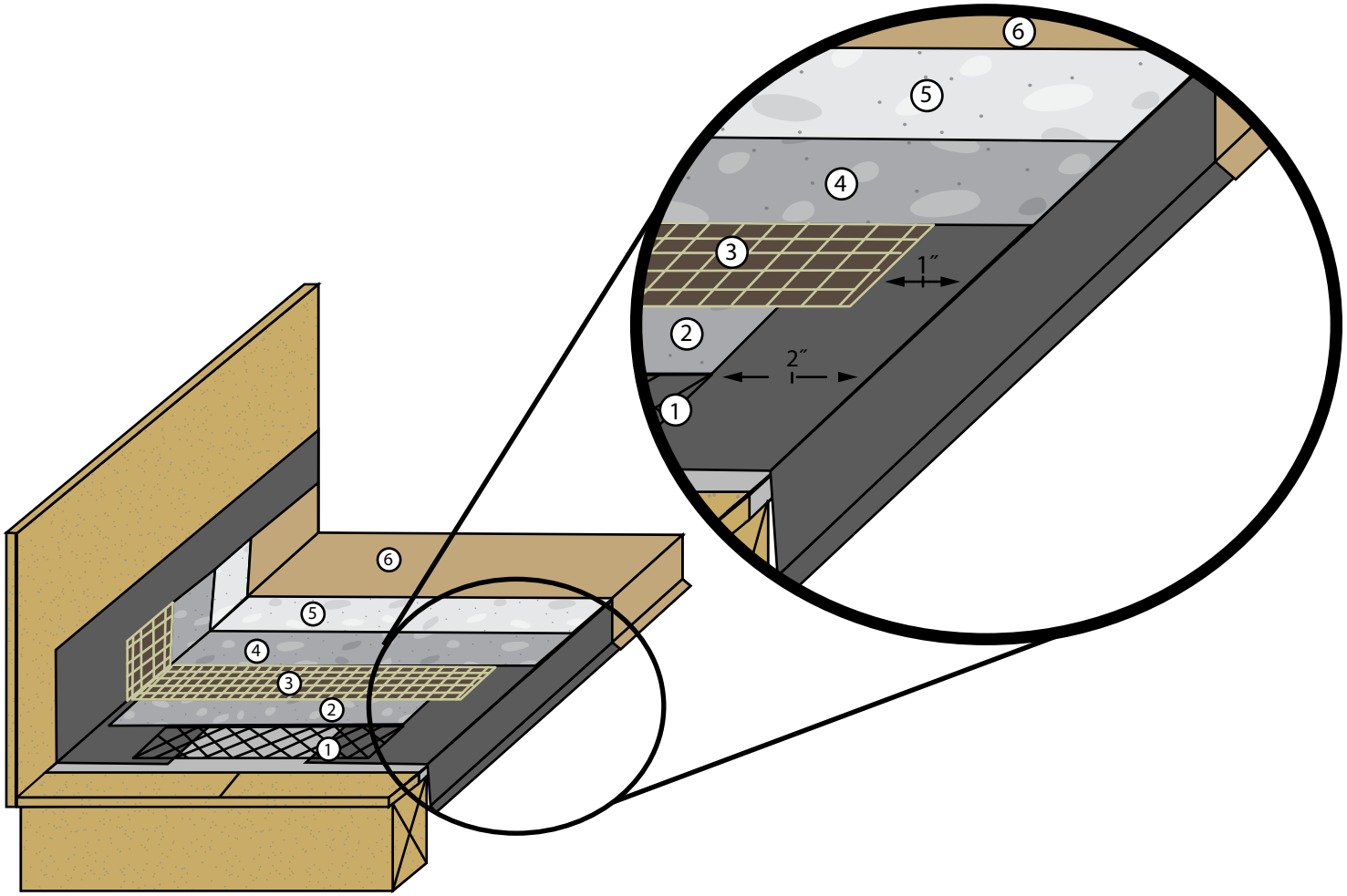

KEYNOTES

1. WP-25 Metal or WP-30 Glass Lath
2. Base Coat
3. WP-95 Membrane & Fabric
4. Body Coat
5. Texture Coat (Optional)
6. SC-10 Acrylic Topcoat

IAPMO ER - 517

- Standard overlap is bottom to top with a 4″ overlap.
- Apply WP-53 on all flashing seams and overlaps.
- Minimum 5/8″ exterior grade plywood.
- Minimum 1/4″ slope required on all decks
- Refer to local building codes and standards.
- Refer to system and product specification sheets.

All details are for reference only and should be evaluated by architect. These details are not a substitute for specifications, plans or evaluation reports. Architect, consultant or similar professional should be review prior to major waterproofing applications.

REV. 3/21/25 TC

SHUR DECK PRO SYSTEM - DRAIN DETAIL

DIVISION 07 18 13
Pedestrian Traffic Coatings

SCALE : NTS

westcoat®
SPECIALTY COATING SYSTEMS
4007 Lockridge Street • San Diego, CA • 92102
800.250.4519 • westcoat.com

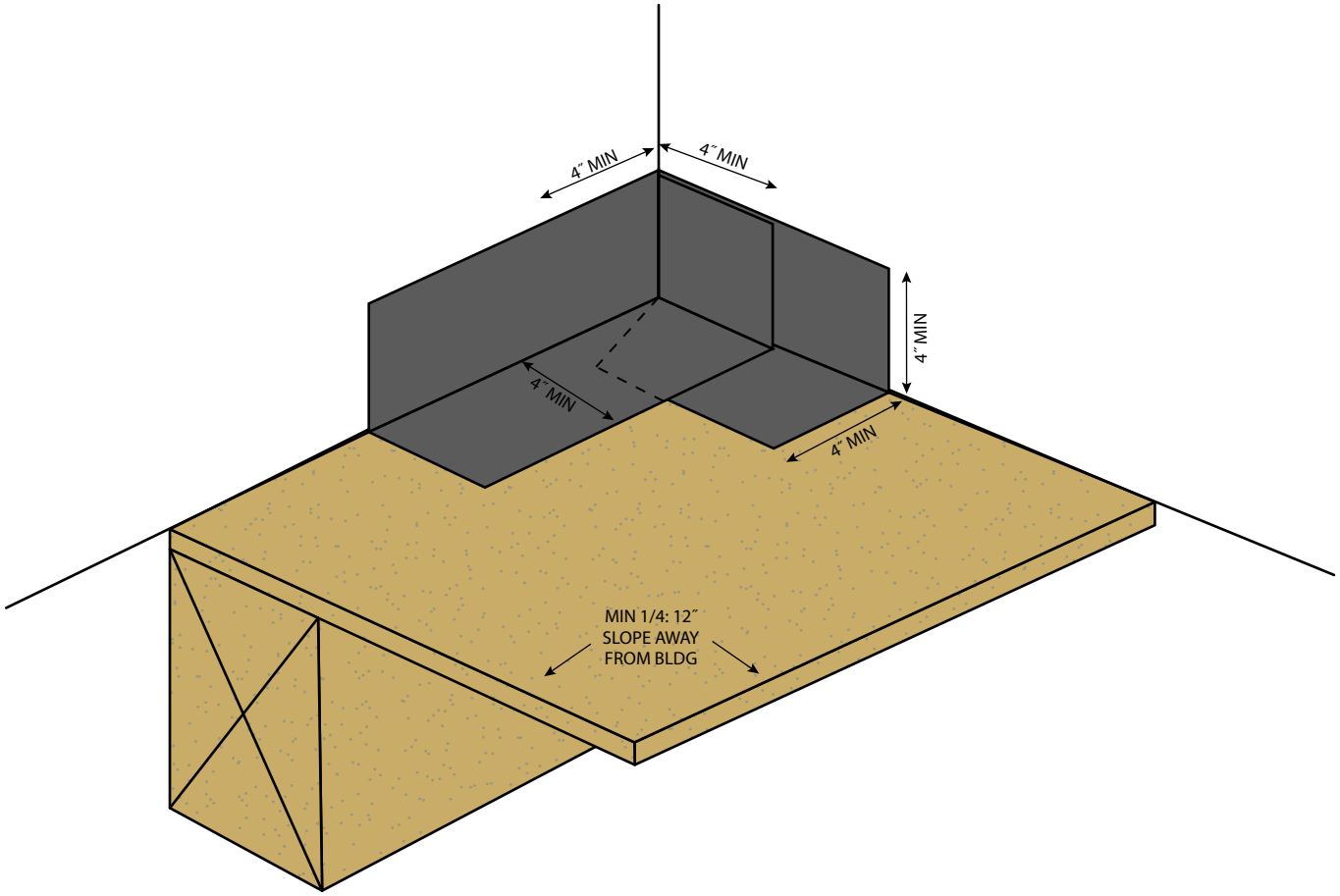

Site Built Piece

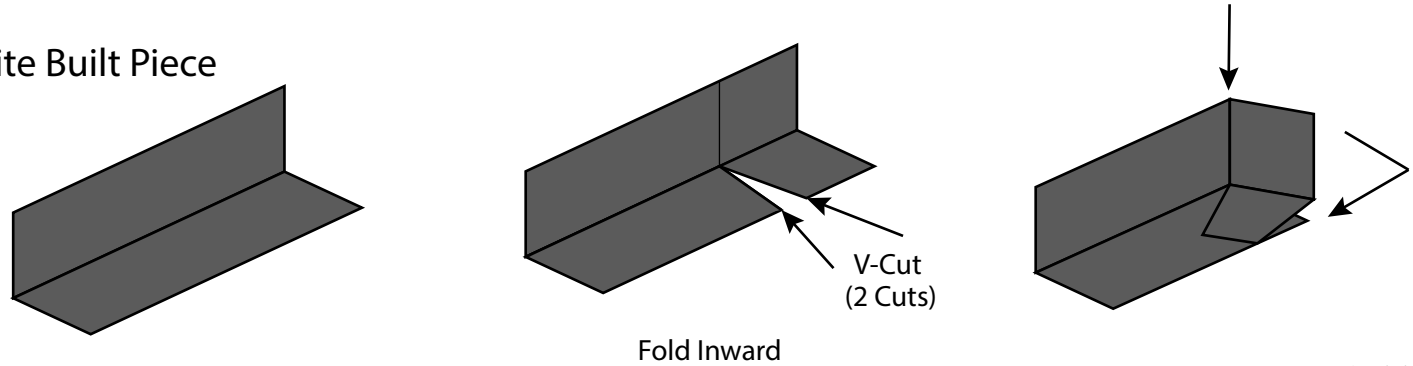

REV. 3/21/25 TC

IAPMO ER - 517

- Apply WP-53 on all flashing seams and overlaps.
- Standard overlap is bottom to top with a 4″ overlap.
- Apply WP-53 on all flashing seams and overlaps.
- Minimum 5/8″ exterior grade plywood.
- Minimum 1/4″ slope required on all decks
- Refer to local building codes and standards.
- Refer to system and product specification sheets.

All details are for reference only and should be evaluated by architect. These details are not a substitute for specifications, plans or evaluation reports. Architect, consultant or similar professional should be review prior to major waterproofing applications.

SHUR DECK SYSTEM - INSIDE CORNER FLASHING DETAIL

DIVISION 07 18 13
Pedestrian Traffic Coatings

SCALE : NTS

westcoat®
SPECIALTY COATING SYSTEMS
4007 Lockridge Street • San Diego, CA • 92102
800.250.4519 • westcoat.com

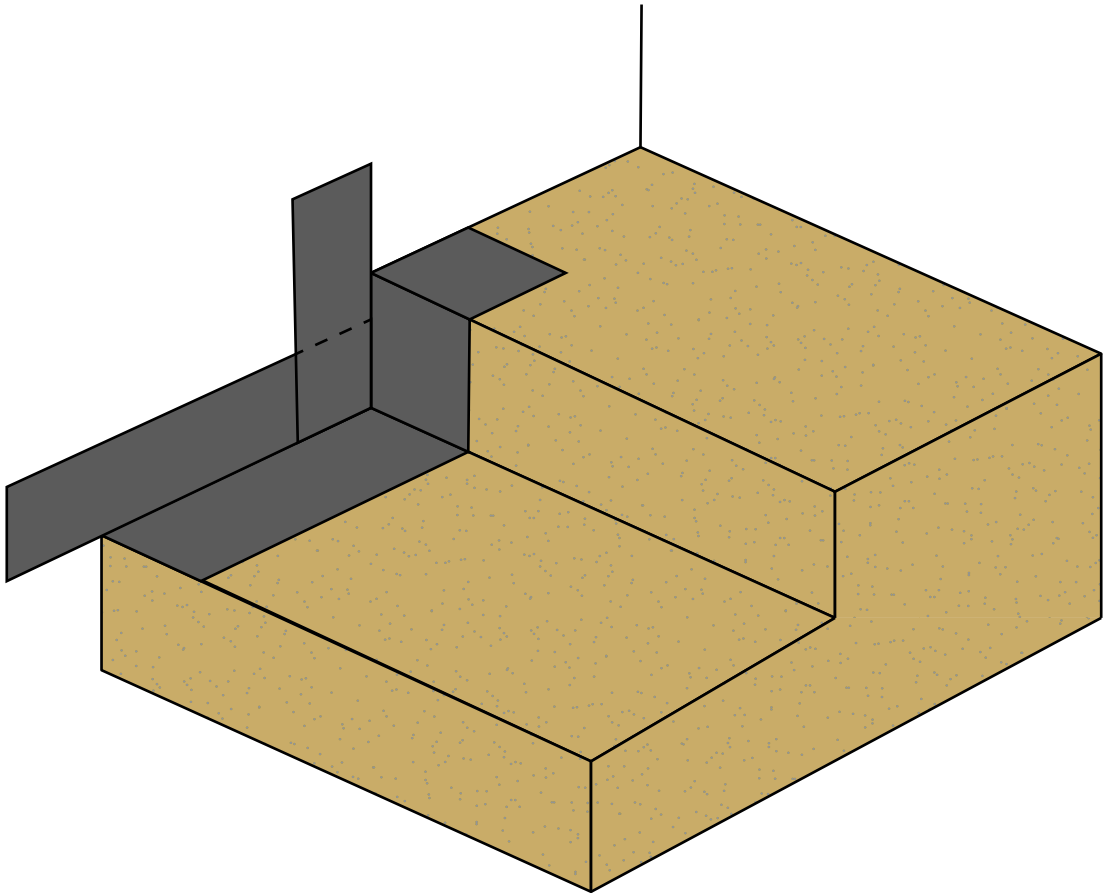

Site Built Piece

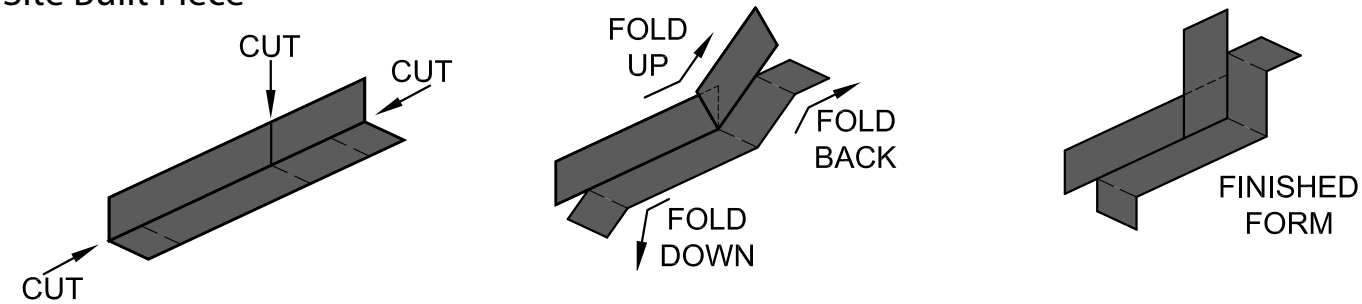

REV. 3/21/25 TC

IAPMO ER - 517

- Apply WP-53 on all flashing seams and overlaps.
- Standard overlap is bottom to top with a 4″ overlap.
- Apply WP-53 on all flashing seams and overlaps.
- Minimum 5/8″ exterior grade plywood.
- Minimum 1/4″ slope required on all decks
- Refer to local building codes and standards.
- Refer to system and product specification sheets.

All details are for reference only and should be evaluated by architect. These details are not a substitute for specifications, plans or evaluation reports. Architect, consultant or similar professional should be review prior to major waterproofing applications.

SHUR DECK SYSTEM - INSIDE CORNER FLASHING DETAIL

DIVISION 07 18 13
Pedestrian Traffic Coatings

SCALE : NTS

westcoat®
SPECIALTY COATING SYSTEMS
4007 Lockridge Street • San Diego, CA • 92102
800.250.4519 • westcoat.com

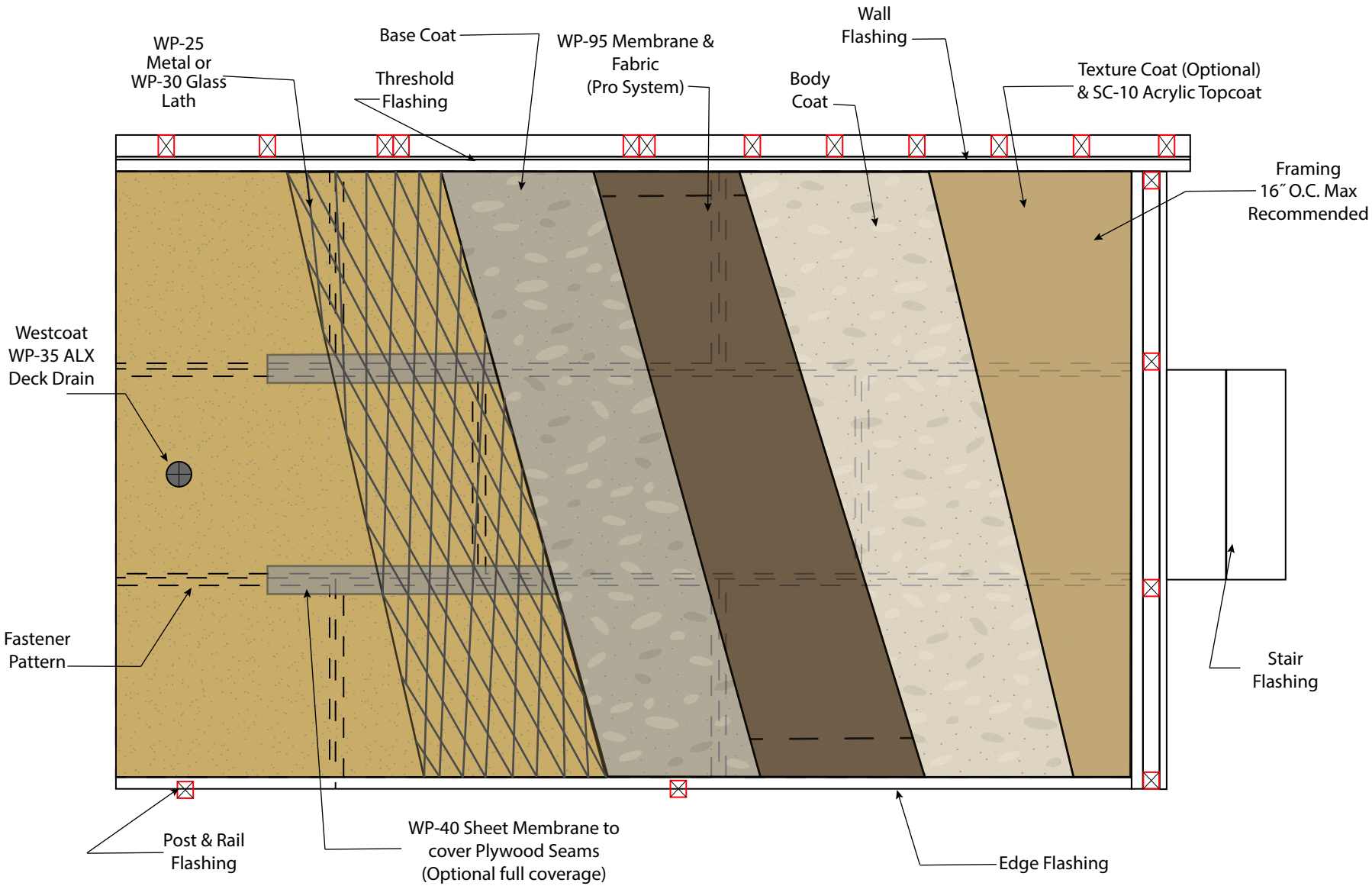

REV. 8/20/25 TC

ER-517

All details are for reference only and should be evaluated by architect. These details are not a substitute for specifications, plans or evaluation reports. Architect, consultant or similar professional should be review prior to major waterproofing applications.

SHUR DECK SYSTEM - DECK PLAN VIEW

DIVISION 07 18 13
Pedestrian Traffic Coatings

SCALE : NTS

westcoat®
SPECIALTY COATING SYSTEMS
4007 Lockridge Street • San Diego, CA • 92102
800.250.4519 • westcoat.com

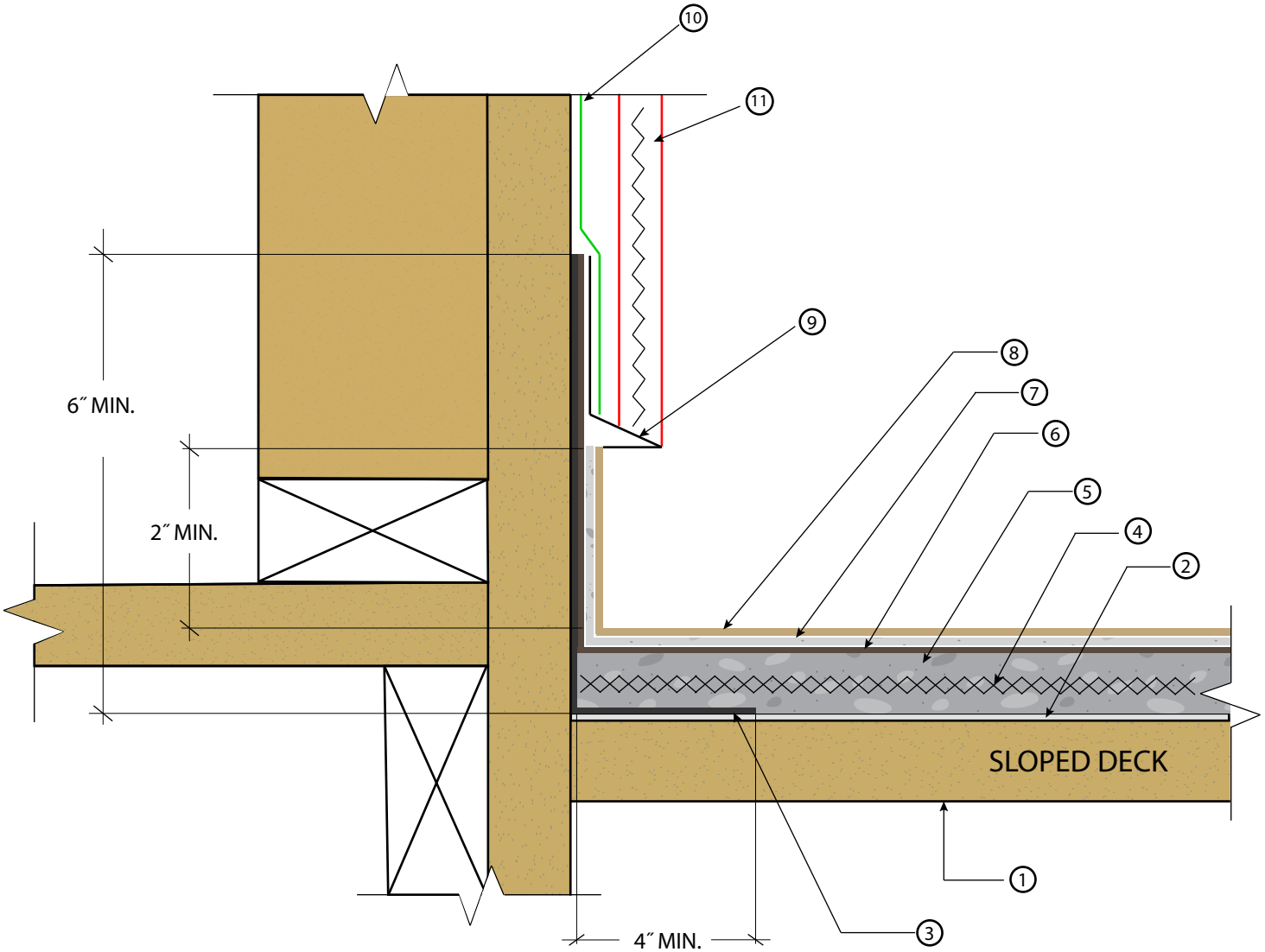

KEYNOTES

1. 5/8″ MIN. Exposure 1 Sheathing (3/4″ Recommended)
2. WP-40 Sheet Membrane (6″ or 36″)
3. 26 Gauge, Bonderized Flashing MIN. 4″ on deck and 6″ height.
4. WP-25 Metal or WP-30 Glass Lath
5. Base Coat
6. WP-95 Membrane & Fabric (Pro System)
7. Body Coat
8. Texture Coat (Optional) and Topcoat
9. Stucco Stop (By Others)
10. Building Paper (By Others)
11. Stucco Finish (By Others)

IAPMO ER - 517

- Standard overlap is bottom to top with a 4″ overlap.
- Apply WP-53 on all flashing seams and overlaps.
- Minimum 5/8″ exterior grade plywood.
- Minimum 1/4″ slope required on all decks
- Refer to local building codes and standards.
- Refer to system and product specification sheets.

All details are for reference only and should be evaluated by architect. These details are not a substitute for specifications, plans or evaluation reports. Architect, consultant or similar professional should be review prior to major waterproofing applications.

REV. 3/21/25 TC

SHUR DECK SYSTEM - DECK TO WALL FLASHING -STUCCO OR EIFS

DIVISION 07 18 13
Pedestrian Traffic Coatings

SCALE : NTS

westcoat®
SPECIALTY COATING SYSTEMS
4007 Lockridge Street • San Diego, CA • 92102
800.250.4519 • westcoat.com

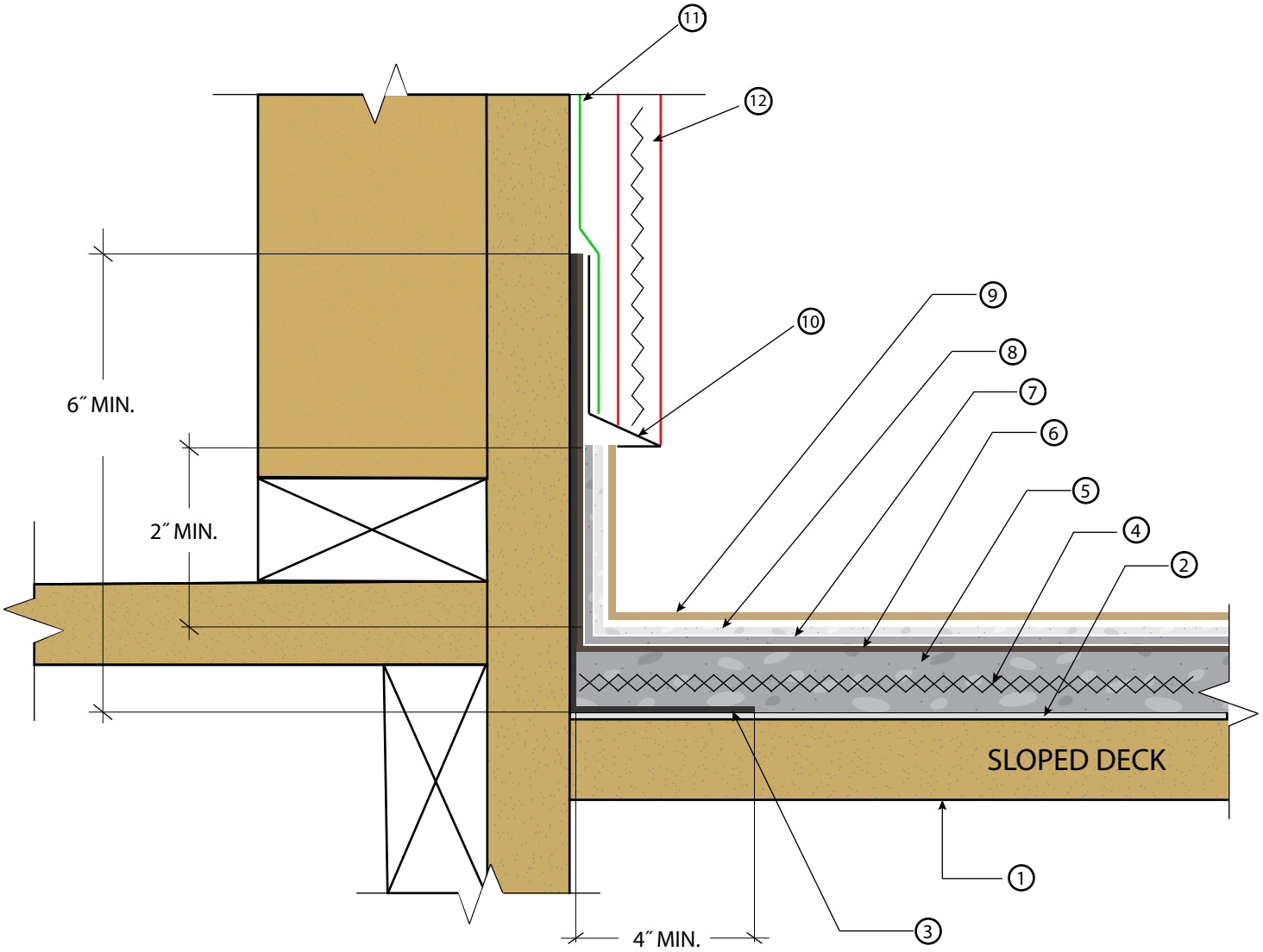

KEYNOTES

1. 5/8″ MIN. Exposure 1 Sheathing (3/4″ Recommended)
2. WP-40 Sheet Membrane (6″ or 36″)
3. 26 Gauge, Bonderized Flashing MIN. 4″ on deck and 6″ height.
4. WP-25 Metal or WP-30 Glass Lath
5. Base Coat
6. WP-95 Membrane & Fabric (Pro System)
7. Body Coat
8. Texture Coat (Optional)
9. SC-10 Topcoat
10. Stucco Stop (By Others)
11. Building Paper (By Others)
12. Stucco Finish (By Others)

IAPMO ER - 517

- Standard overlap is bottom to top with a 4″ overlap.
- Apply WP-53 on all flashing seams and overlaps.
- For maximum adhesion, WP-43 Sheet Membrane Primer should be used.
- Minimum 5/8″ exterior grade plywood.
- Minimum 1/4″ slope required on all decks
- Refer to local building codes and standards.
- Refer to system and product specification sheets.

All details are for reference only and should be evaluated by architect. These details are not a substitute for specifications, plans or evaluation reports. Architect, consultant or similar professional should be review prior to major waterproofing applications.

REV. 8/14/25 TC

SHUR DECK SYSTEM - DECK TO WALL FLASHING -STUCCO OR EIFS

DIVISION 07 18 13
Pedestrian Traffic Coatings

SCALE : NTS

westcoat®
SPECIALTY COATING SYSTEMS
4007 Lockridge Street • San Diego, CA • 92102
800.250.4519 • westcoat.com

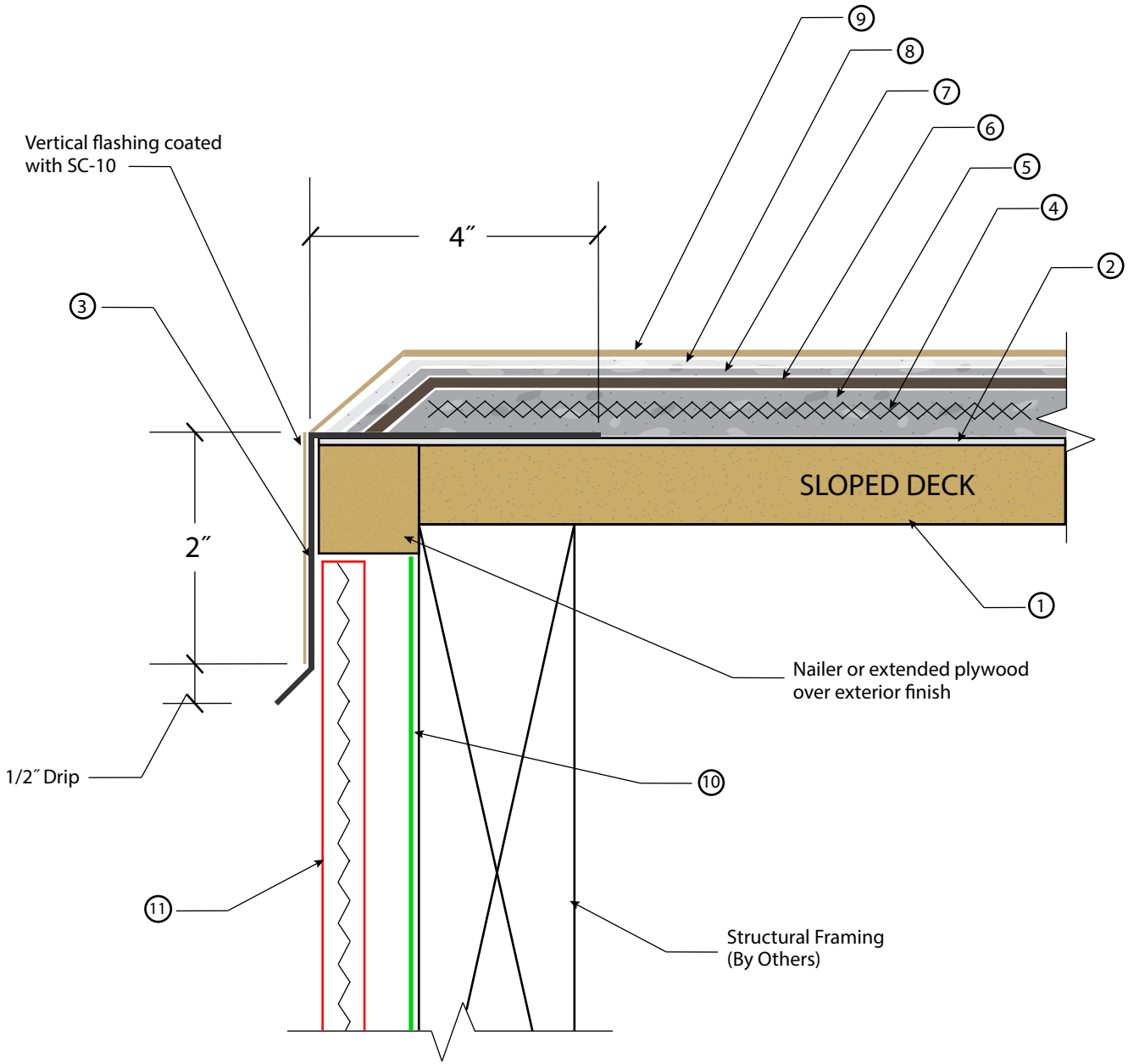

KEYNOTES

1. 5/8″ MIN. Exposure 1 Sheathing (3/4″ Recommended)
2. WP-40 Sheet Membrane (6″ or 36″)
3. 26 Gauge, Bonderized Flashing
4. WP-25 Metal or WP-30 Glass Lath
5. Base Coat
6. WP-95 Membrane & Fabric (Pro System)
7. Body Coat
8. Texture Coat (Optional)
9. Topcoat
10. Building Paper (By Others)
11. Stucco Finish (By Others)

IAPMO ER - 517

- Standard overlap is bottom to top with a 4″ overlap.
- For maximum adhesion, WP-43 Sheet Membrane Primer should be used.
- Apply WP-53 on all flashing seams and overlaps.
- Minimum 5/8″ exterior grade plywood.
- Minimum 1/4″ slope required on all decks
- Refer to local building codes and standards.
- Refer to system and product specification sheets.

All details are for reference only and should be evaluated by architect. These details are not a substitute for specifications, plans or evaluation reports. Architect, consultant or similar professional should be review prior to major waterproofing applications.

REV. 8/14/25 TC

SHUR DECK SYSTEM - EDGE METAL FLASHING OVER STUCCO FASCIA

DIVISION 07 18 13
Pedestrian Traffic Coatings

SCALE : NTS

westcoat®
SPECIALTY COATING SYSTEMS
4007 Lockridge Street • San Diego, CA • 92102
800.250.4519 • westcoat.com

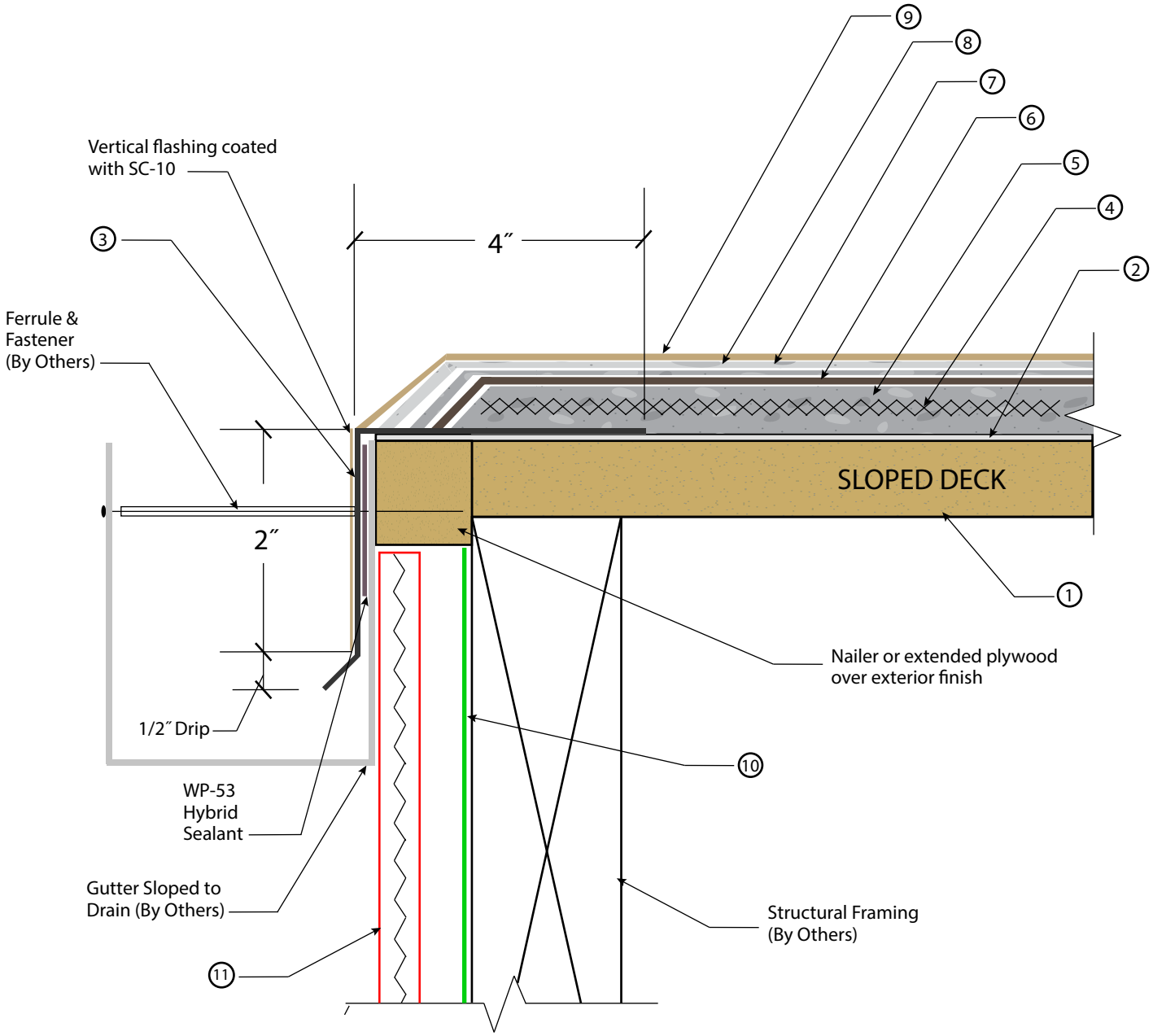

REV. 8/14/25 TC

KEYNOTES

1. 5/8″ MIN. Exposure 1 Sheathing (3/4″ Recommended)
2. WP-40 Sheet Membrane (6″ or 36″)
3. 26 Gauge, Bonderized Flashing
4. WP-25 Metal or WP-30 Glass Lath
5. Base Coat
6. WP-95 Membrane & Fabric (Pro System)
7. Body Coat
8. Texture Coat (Optional)
9. SC-10 Topcoat
10. Building Paper (By Others)
11. Stucco Finish (By Others)

IAPMO ER - 517

- Standard overlap is bottom to top with a 4″ overlap.
- For maximum adhesion, WP-43 Sheet Membrane Primer should be used.
- Apply WP-53 on all flashing seams and overlaps.
- Minimum 5/8″ exterior grade plywood.
- Minimum 1/4″ slope required on all decks
- Refer to local building codes and standards.
- Refer to system and product specification sheets.

All details are for reference only and should be evaluated by architect. These details are not a substitute for specifications, plans or evaluation reports. Architect, consultant or similar professional should be review prior to major waterproofing applications.

SHUR DECK SYSTEM - EDGE METAL TO GUTTER

DIVISION 07 18 13
Pedestrian Traffic Coatings

SCALE : NTS

westcoat®
SPECIALTY COATING SYSTEMS
4007 Lockridge Street • San Diego, CA • 92102
800.250.4519 • westcoat.com

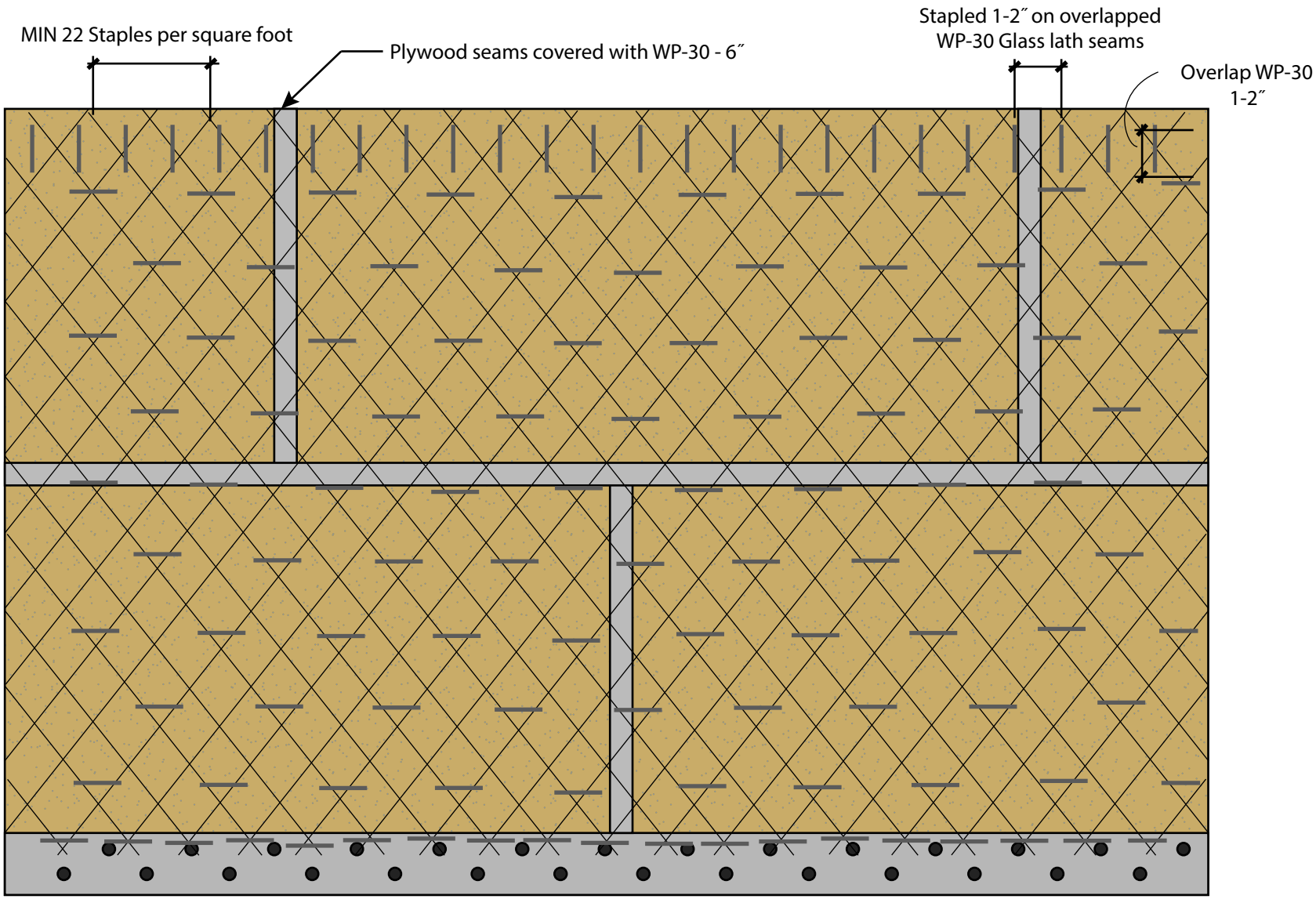

Note: Perimeter lath should be stapled every 1-2″

REV. 8/20/25 TC

ER-517

All details are for reference only and should be evaluated by architect. These details are not a substitute for specifications, plans or evaluation reports. Architect, consultant or similar professional should be review prior to major waterproofing applications.

SHUR DECK SYSTEM - GLASS LATH AND PERIMETER FLASHING FASTENER PATTERN

DIVISION 07 18 13
Pedestrian Traffic Coatings

SCALE : NTS

westcoat®
SPECIALTY COATING SYSTEMS
4007 Lockridge Street • San Diego, CA • 92102
800.250.4519 • westcoat.com

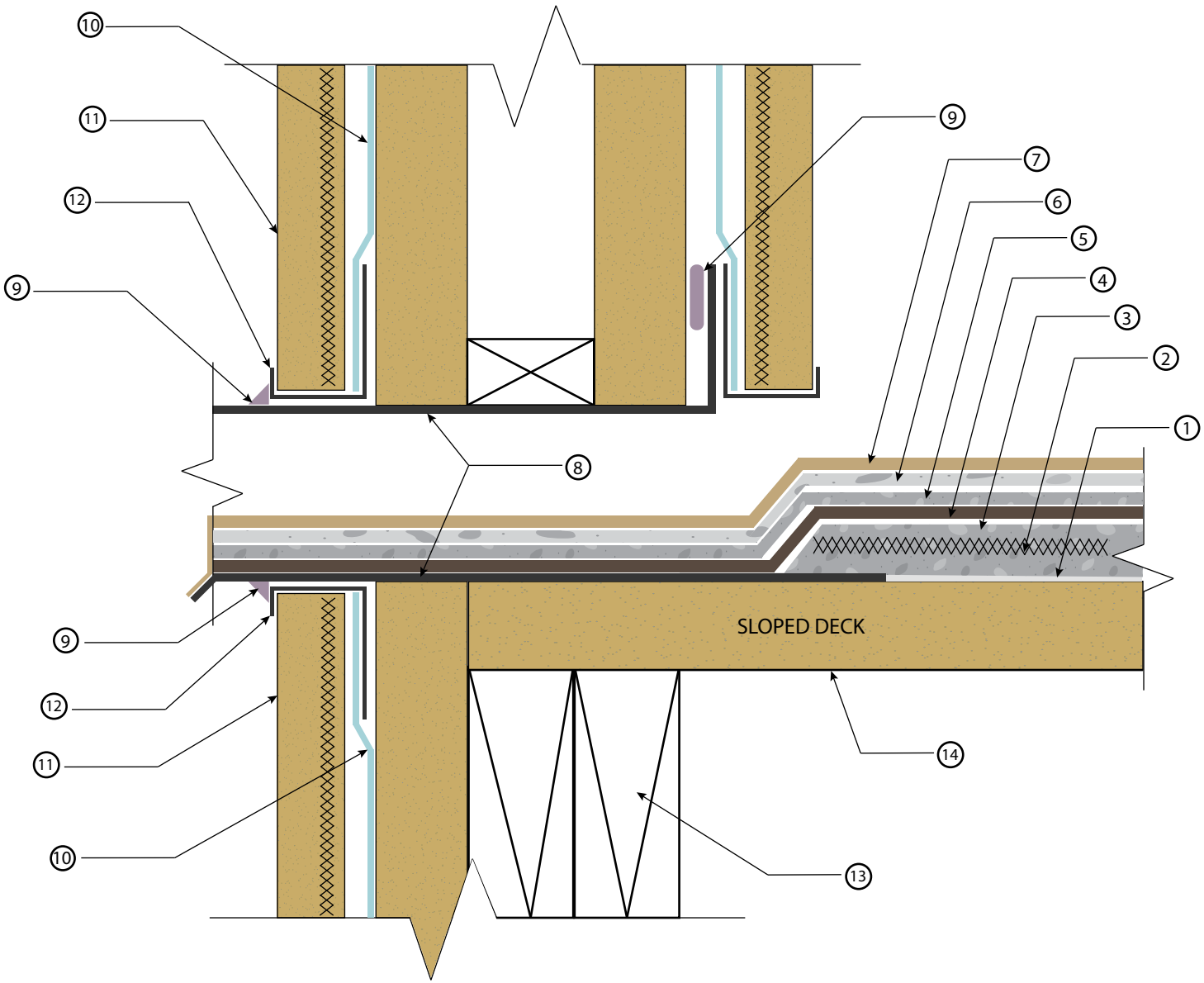

KEYNOTES

1. WP-40 Sheet Membrane (6″ or 36″)
2. WP-25 Metal or WP-30 Glass Lath
3. Base Coat
4. WP-95 Membrane & Fabric (Pro System)
5. Body Coat
6. Texture Coat (Optional)
7. Topcoat
8. Scupper Bonderized or Stainless (by others)
9. WP-53 Hybrid Sealant
10. Building Paper (by others)
11. Stucco Finish (by others)
12. Stucco Stop (by others)
13. Structural Design (by others)
14. 5/8″ MIN. Exposure 1 Sheathing (3/4″ Recommended)

IAPMO ER - 517

- Standard overlap is bottom to top with a 4″ overlap.
- For maximum adhesion, WP-43 Sheet Membrane Primer should be used.
- Apply WP-53 on all flashing seams and overlaps.
- Minimum 5/8″ exterior grade plywood.
- Minimum 1/4″ slope required on all decks
- Refer to local building codes and standards.
- Refer to system and product specification sheets.

All details are for reference only and should be evaluated by architect. These details are not a substitute for specifications, plans or evaluation reports. Architect, consultant or similar professional should be review prior to major waterproofing applications.

REV. 8/20/25 TC

SHUR DECK SYSTEM - SCUPPER DETAIL

DIVISION 07 18 13
Pedestrian Traffic Coatings

SCALE : NTS

westcoat®
SPECIALTY COATING SYSTEMS
4007 Lockridge Street • San Diego, CA • 92102
800.250.4519 • westcoat.com

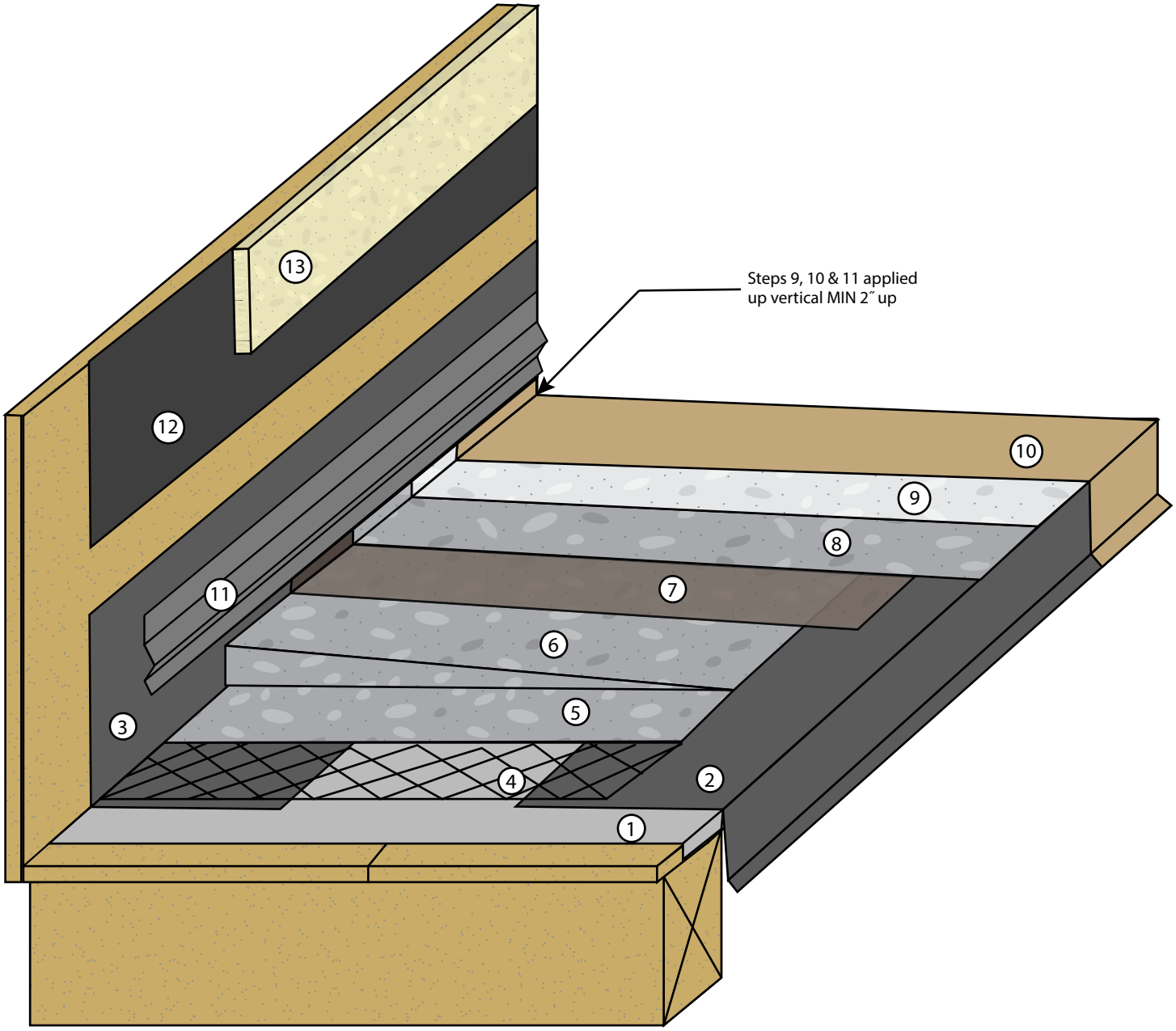

REV. 8/20/25 TC

KEYNOTES

1. WP-40 Sheet Membrane (6″ or 36″)
2. Drip Edge Metal (2″x4″) 26 gauge, bonderized
3. Wall-to-deck "L" Metal (6″x4″) 26 gauge, bonderized
4. WP-25 Metal or WP-30 Glass Lath
5. Base Coat
6. TC-30 Slope Mix
7. WP-95 Membrane & Fabric
8. BodyCoat
9. Texture Coat (Optional)
10. SC-10 Acrylic Topcoat
11. Continuous drip screed
12. Building Paper
13. Wall Finish

IAPMO ER - 517

- Standard overlap is bottom to top with a 4″ overlap.
- For maximum adhesion, WP-43 Sheet Membrane Primer should be used.
- Apply WP-53 on all flashing seams and overlaps.
- Minimum 5/8″ exterior grade plywood.
- Minimum 1/4″ slope required on all decks
- Refer to local building codes and standards.
- Refer to system and product specification sheets.

All details are for reference only and should be evaluated by architect. These details are not a substitute for specifications, plans or evaluation reports. Architect, consultant or similar professional should be review prior to major waterproofing applications.

SHUR DECK SYSTEM - SLOPE TECHNIQUE

DIVISION 07 18 13
Pedestrian Traffic Coatings

SCALE : NTS

westcoat®
SPECIALTY COATING SYSTEMS
4007 Lockridge Street • San Diego, CA • 92102
800.250.4519 • westcoat.com

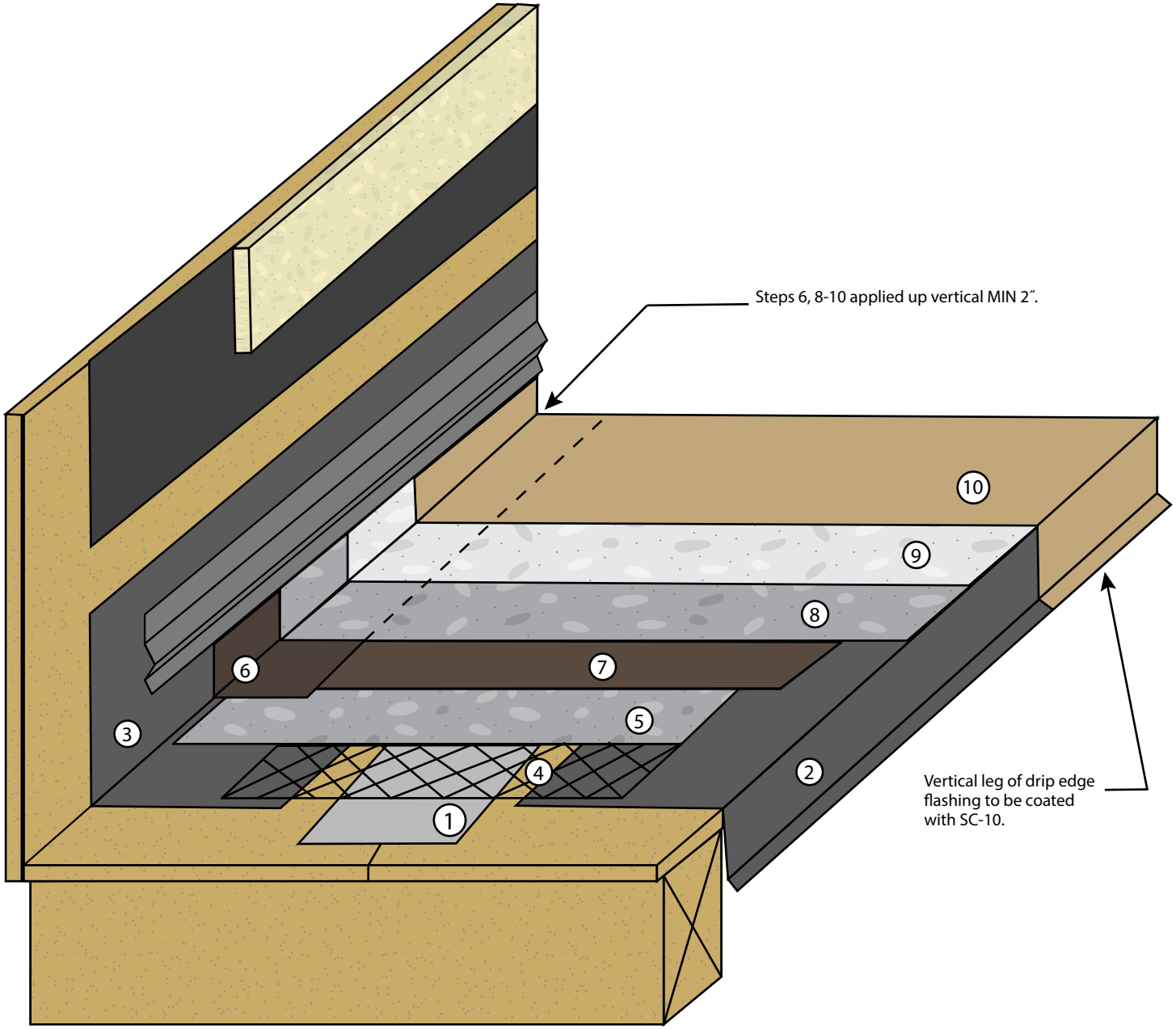

REV. 8/20/25 TC

KEYNOTES

1. WP-40 Sheet Membrane
2. Drip Edge Metal (2″x4″) 26 gauge, bonderized
3. Wall-to-deck "L" Metal (6″x4″) 26 gauge, bonderized
4. WP-25 Metal or WP-30 Glass Lath
5. Base Coat
6. WP-95 Membrane with Fabric (Flashing) (PRO SYSTEM)
7. WP-95 Membrane with Fabric (Deck) (PRO SYSTEM)
8. Body Coat
9. Texture Coat (Optional)
10. SC-10 Acrylic Topcoat
11. Continuous drip screed
12. Building Paper
13. Wall Finish

IAPMO ER - 517

- Standard overlap is bottom to top with a 4″ overlap.
- Apply WP-53 on all flashing seams and overlaps.
- For maximum adhesion, WP-43 Sheet Membrane Primer should be used.
- Minimum 5/8″ exterior grade plywood.
- Minimum 1/4″ slope required on all decks
- Refer to local building codes and standards.
- Refer to system and product specification sheets.

All details are for reference only and should be evaluated by architect. These details are not a substitute for specifications, plans or evaluation reports. Architect, consultant or similar professional should be review prior to major waterproofing applications.

SHUR DECK SYSTEM - OVERVIEW

DIVISION 07 18 13
Pedestrian Traffic Coatings

SCALE : NTS

westcoat®
SPECIALTY COATING SYSTEMS
4007 Lockridge Street • San Diego, CA • 92102
800.250.4519 • westcoat.com

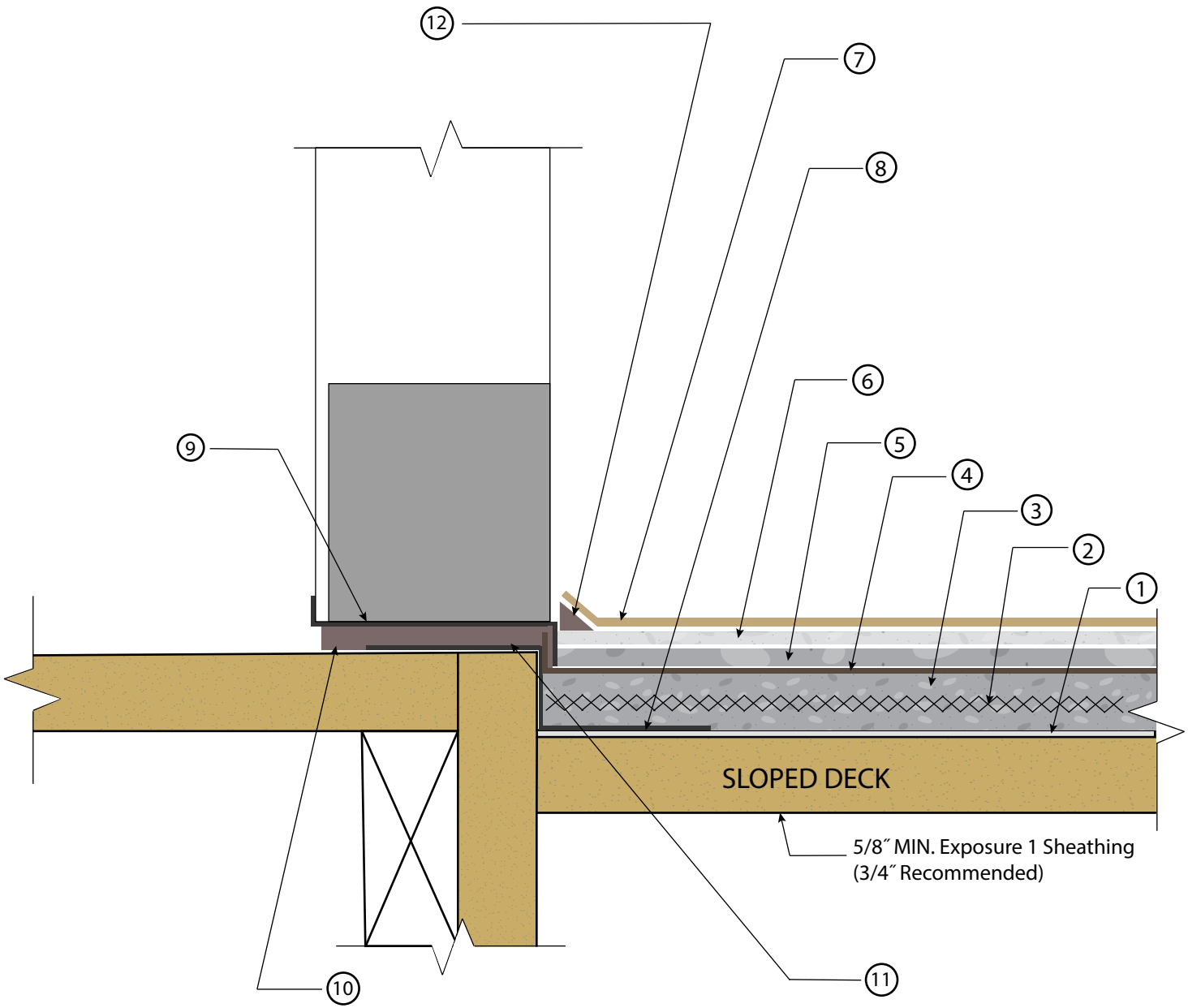

REV. 8/20/25 TC

KEYNOTES

1. WP-40 Sheet Membrane
2. WP-25 Metal or WP-30 Glass Lath
3. Base Coat
4. WP-95 Membrane & Fabric (PRO SYSTEM)
5. Body Coat
6. Texture Coat (Optional)
7. SC-10 Topcoat
8. 26 Gauge, Bonderized Flashing MIN. 4″ on deck and 6″ height. Overlap wall to deck flashing 4″ on either side of opening.
9. Threshold Flashing Pan
10. WP-53 Hybid Sealant Between flashing and threshold, as well as between door jamb and threshold
11. Full embedment of WP-53 between flashing and compress together
12. WP-53 Sealant

IAPMO ER - 517

- Standard overlap is bottom to top with a 4″ overlap.
- For maximum adhesion, WP-43 Sheet Membrane Primer should be used.
- Apply WP-53 on all flashing seams and overlaps.
- Minimum 5/8″ exterior grade plywood.
- Minimum 1/4″ slope required on all decks
- Refer to local building codes and standards.
- Refer to system and product specification sheets.

All details are for reference only and should be evaluated by architect. These details are not a substitute for specifications, plans or evaluation reports. Architect, consultant or similar professional should be review prior to major waterproofing applications.

SHUR DECK SYSTEM - TWO PIECE DOOR PAN FLASHING

DIVISION 07 18 13
Pedestrian Traffic Coatings

SCALE : NTS

westcoat®
SPECIALTY COATING SYSTEMS
4007 Lockridge Street • San Diego, CA • 92102
800.250.4519 • westcoat.com

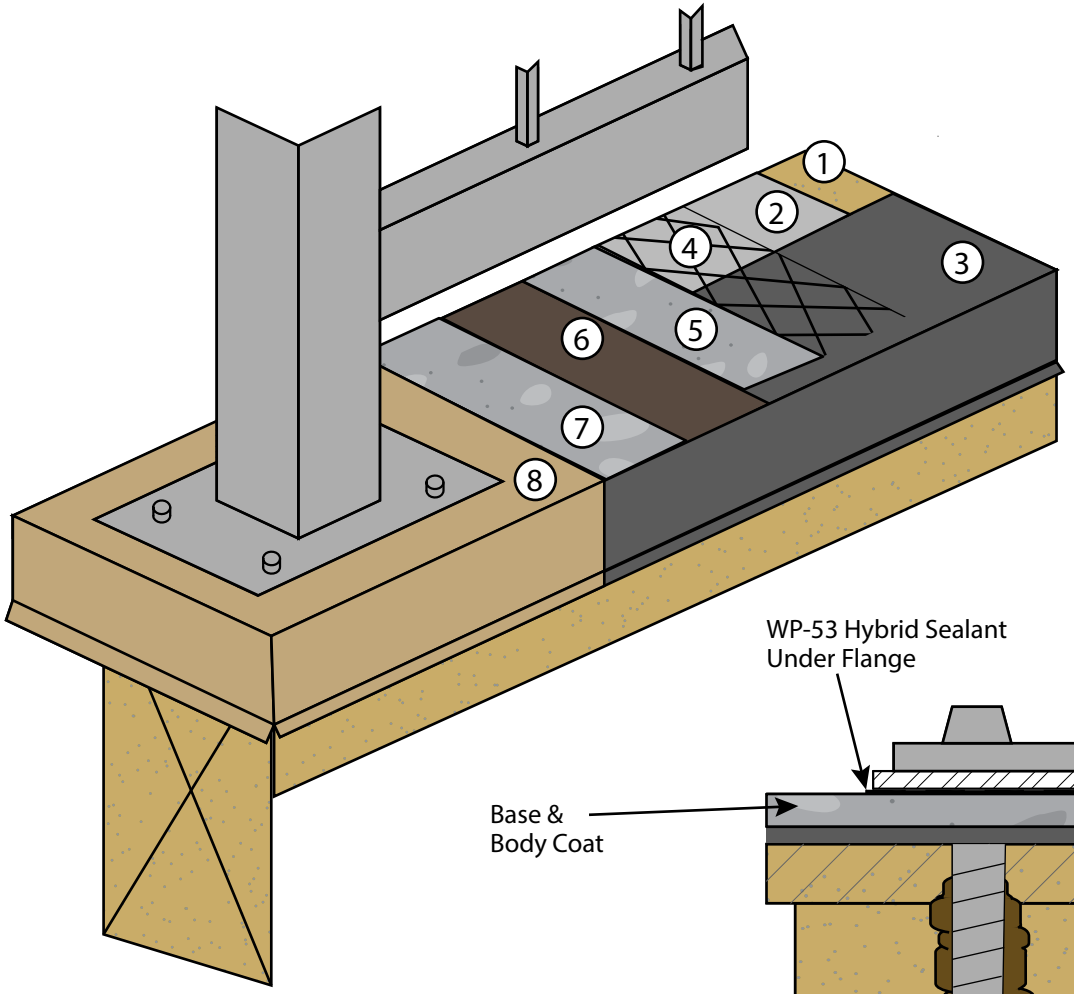

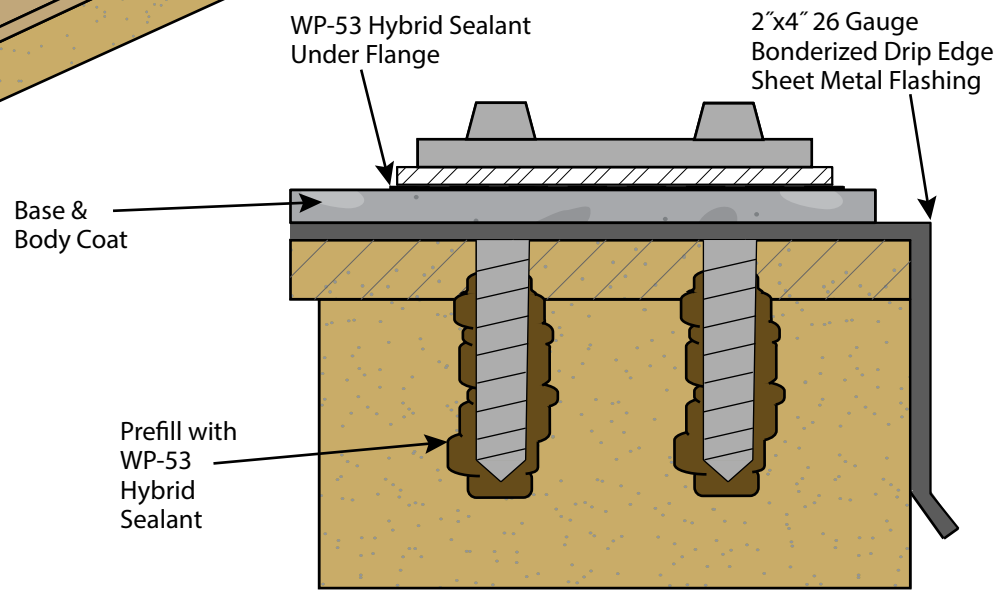

SIDE PROFILE

REV. 3/21/25 TC

KEYNOTES

1. Plywood (by others)
2. WP-40 Sheet Membrane (6″ or 36″)
3. Bonderized Metal Flashing
4. WP-25 Metal or WP-30 Glass Lath
5. Base Coat
6. WP-95 Membrane & Fabric (Pro System)
7. Body Coat
8. Texture Coat & Topcoat

POST TO BE INSTALLED ON TOP OF BODY COAT. A TEXTURE COAT MUST BE APPLIED AFTER POST FLANGE INSTALL

IAPMO ER - 517

- Standard overlap is bottom to top with a 4″ overlap.
- Apply WP-53 on all flashing seams and overlaps.
- Minimum 5/8″ exterior grade plywood.
- Minimum 1/4″ slope required on all decks
- Refer to local building codes and standards.
- Refer to system and product specification sheets.
- Shows best option for top mount. Side mount is recommended for all railings.

All details are for reference only and should be evaluated by architect. These details are not a substitute for specifications, plans or evaluation reports. Architect, consultant or similar professional should be review prior to major waterproofing applications.

SHUR DECK SYSTEM - TOP MOUNT RAILING

DIVISION 07 18 13
Pedestrian Traffic Coatings

SCALE : NTS

westcoat®
SPECIALTY COATING SYSTEMS
4007 Lockridge Street • San Diego, CA • 92102
800.250.4519 • westcoat.com